Reasoning by Cases in the Nonmonotonic Wilderness

Logic in the Wild Workshop, Gent, November 2017

Christian Straßer (joint work with Mathieu Beirlaen and Jesse Heyninck)

November 10, 2017

Outline

Introduction

Reasoning by Cases in Structured Argumentation.

Mathieu Beirlaen
Research Group for
Non-Monotonic Logic and
Formal Argumentation
Ruhr University Bochum
mathieubeirlaen@gmail.com

Jesse Heyninck
Research Group for
Non-Monotonic Logic and
Formal Argumentation
Ruhr University Bochum
jesse.heyninck@ruhr-uni-bochum.de

Christian Straßer
Research Group for
Non-Monotonic Logic and
Formal Argumentation
Ruhr University Bochum
christian.strasser@ruhr-uni-bochum.de

SAC/KRR 2017, Marrakesh, Morocco

What we expected ...

… and how it turned out …

What is Reasoning by Cases?

Reasoning by Cases

- in natural deduction

$$\dfrac{\begin{array}{c}\Gamma\\ \vdots\\ A \vee B\end{array} \quad \begin{array}{c}\Gamma, [A]^1\\ \vdots\\ C\end{array} \quad \begin{array}{c}\Gamma, [B]^1\\ \vdots\\ C\end{array}}{C}\ \vee\mathrm{E}_1$$

Reasoning by Cases

- in natural deduction

$$\dfrac{\begin{array}{c}\Gamma\\ \vdots\\ A \vee B\end{array} \quad \begin{array}{c}\Gamma, [A]^1\\ \vdots\\ C\end{array} \quad \begin{array}{c}\Gamma, [B]^1\\ \vdots\\ C\end{array}}{C}\ \vee\mathrm{E}_1$$

- expressed with $\supset$:

$$\dfrac{A \vee B \quad A \supset C \quad B \supset C}{C}$$

Reasoning by Cases, Defeasibly

- strict rules ("$\rightarrow$") vs. defeasible rules ("$\Rightarrow$")

Reasoning by Cases, Defeasibly

- strict rules ("$\rightarrow$") vs. defeasible rules ("$\Rightarrow$")
- schematically:

$$\frac{A \vee B \quad A \Rightarrow C \quad B \Rightarrow C}{C}$$

Reasoning by Cases, Defeasibly

- strict rules ("$\rightarrow$") vs. defeasible rules ("$\Rightarrow$")
- schematically:

$$\frac{A \vee B \quad A \Rightarrow C \quad B \Rightarrow C}{C}$$

- or, more generally:

$$\frac{A \vee B \quad A \Rightarrow \cdots \Rightarrow C \quad B \Rightarrow \cdots \Rightarrow C}{C}$$

Reasoning by Cases, Defeasibly

- strict rules ("$\rightarrow$") vs. defeasible rules ("$\Rightarrow$")
- schematically:

$$\frac{A \vee B \quad A \Rightarrow C \quad B \Rightarrow C}{C}$$

- or, more generally:

$$\frac{A \vee B \quad A \Rightarrow \cdots \Rightarrow C \quad B \Rightarrow \cdots \Rightarrow C}{C}$$

- or, more generally:

$$\frac{A \vee B \quad A \mid\!\sim C \quad B \mid\!\sim C}{C}$$

Read $A \mid\!\sim C$: "C follows defeasibly from A" or "There is a (defeasible) argument for C based on A."

The Meta-Rule Approach: OR

- Rules for rules:

$$\frac{A \Rightarrow C \quad B \Rightarrow C}{A \vee B \Rightarrow C}\ [\text{OR}]$$

The Meta-Rule Approach: OR

- Rules for rules:

$$\frac{A \Rightarrow C \quad B \Rightarrow C}{A \vee B \Rightarrow C}\ [\text{OR}]$$

- Illustration:

The Meta-Rule Approach: OR

- Rules for rules:

$$\frac{A \Rightarrow C \quad B \Rightarrow C}{A \vee B \Rightarrow C}\ [\text{OR}]$$

- Illustration:

1. $A \Rightarrow C$ PREM

The Meta-Rule Approach: OR

- Rules for rules:

$$\frac{A \Rightarrow C \quad B \Rightarrow C}{A \vee B \Rightarrow C}\ [\text{OR}]$$

- Illustration:

1.	$A \Rightarrow C$	PREM
2.	$B \Rightarrow C$	PREM

The Meta-Rule Approach: OR

- Rules for rules:

$$\frac{A \Rightarrow C \quad B \Rightarrow C}{A \vee B \Rightarrow C}\ [\text{OR}]$$

- Illustration:

1.	$A \Rightarrow C$	PREM
2.	$B \Rightarrow C$	PREM
3.	$A \vee B$	PREM

The Meta-Rule Approach: OR

- Rules for rules:

$$\frac{A \Rightarrow C \quad B \Rightarrow C}{A \vee B \Rightarrow C}\ [\text{OR}]$$

- Illustration:

1.	$A \Rightarrow C$	PREM
2.	$B \Rightarrow C$	PREM
3.	$A \vee B$	PREM
4.	$A \vee B \Rightarrow C$	1,2; OR

The Meta-Rule Approach: OR

- Rules for rules:

$$\frac{A \Rightarrow C \quad B \Rightarrow C}{A \vee B \Rightarrow C}\ [\text{OR}]$$

- Illustration:

1.	$A \Rightarrow C$	PREM
2.	$B \Rightarrow C$	PREM
3.	$A \vee B$	PREM
4.	$A \vee B \Rightarrow C$	1,2; OR
5.	C	3,4; DefeasibleMP

A Problematic Example for OR

Suppose we have

$\Sigma = \{p \Rightarrow q \vee r, q \Rightarrow s, s \Rightarrow v, r \Rightarrow u, u \Rightarrow v, p\}$.

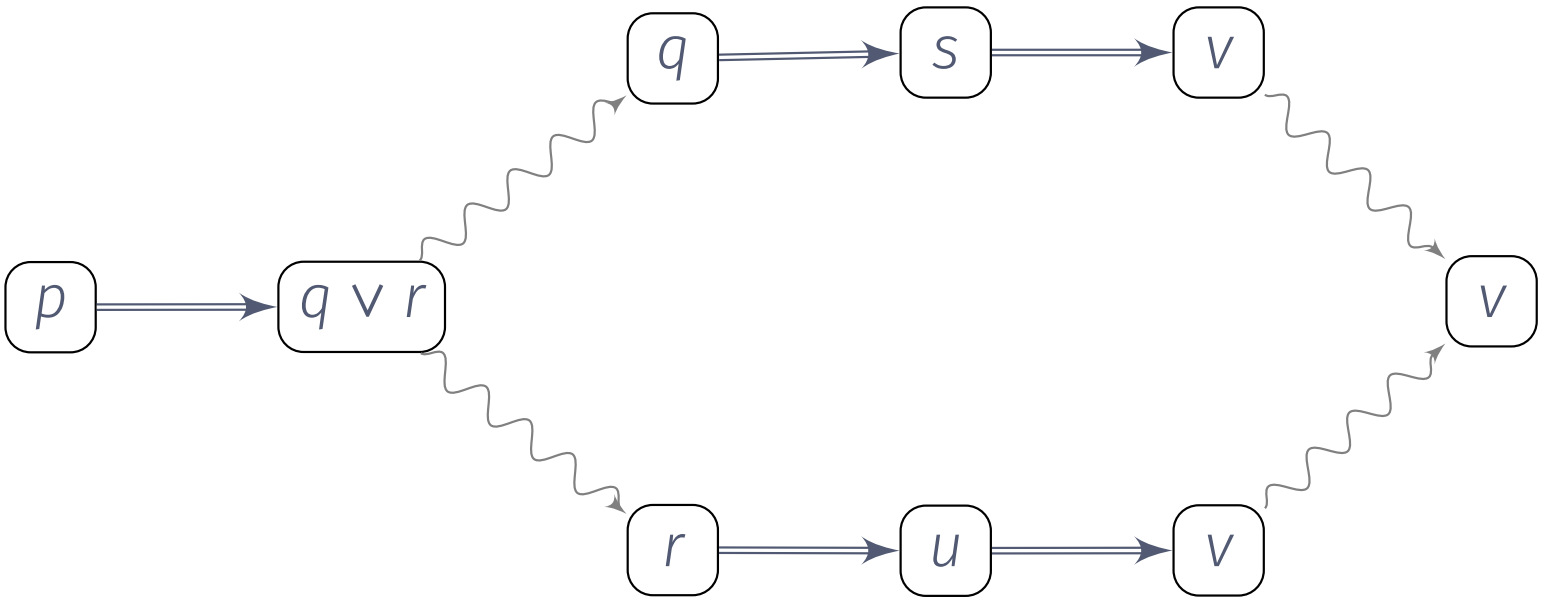

A Problematic Example for OR

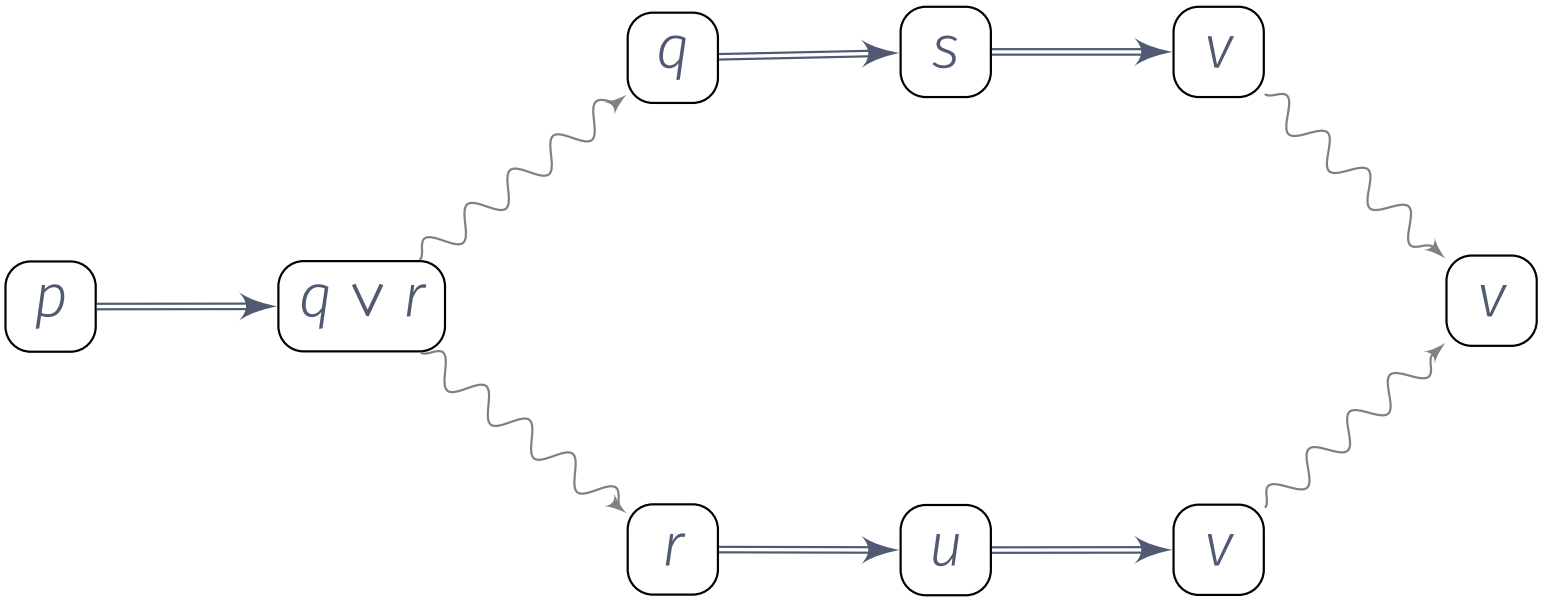

A Problematic Example for OR

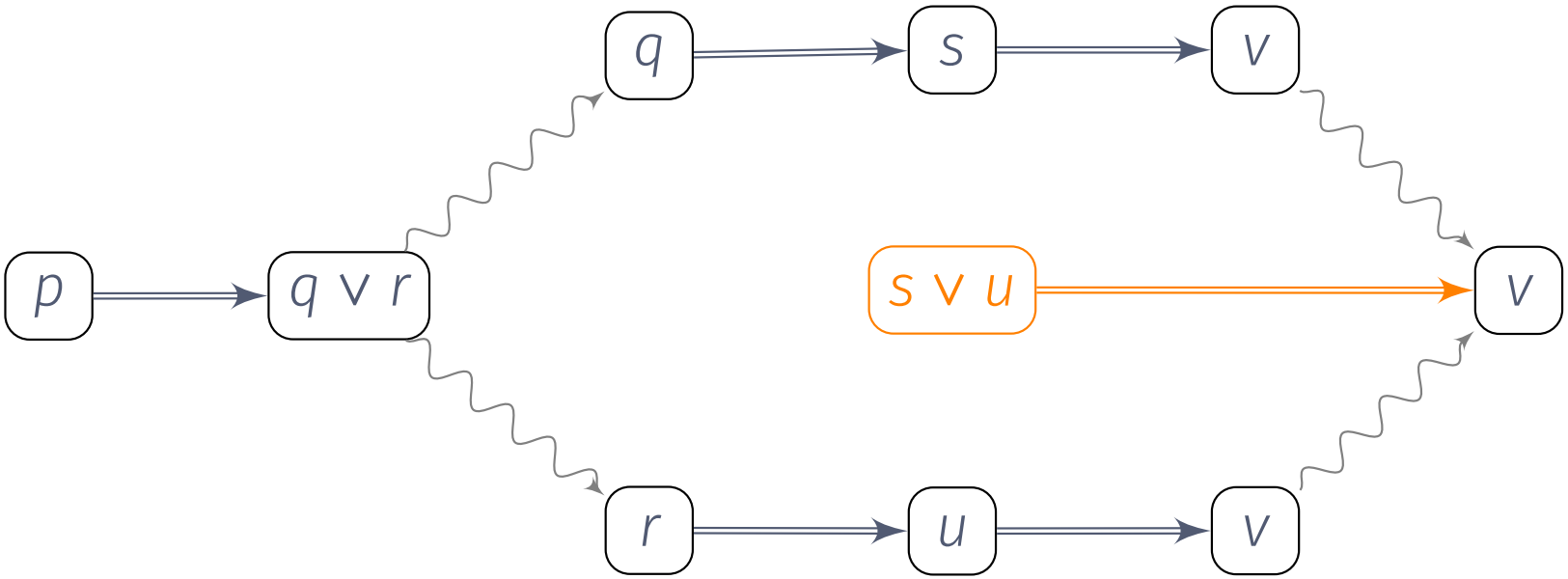

- by (OR): from $s \Rightarrow v$ and $u \Rightarrow v$

A Problematic Example for OR

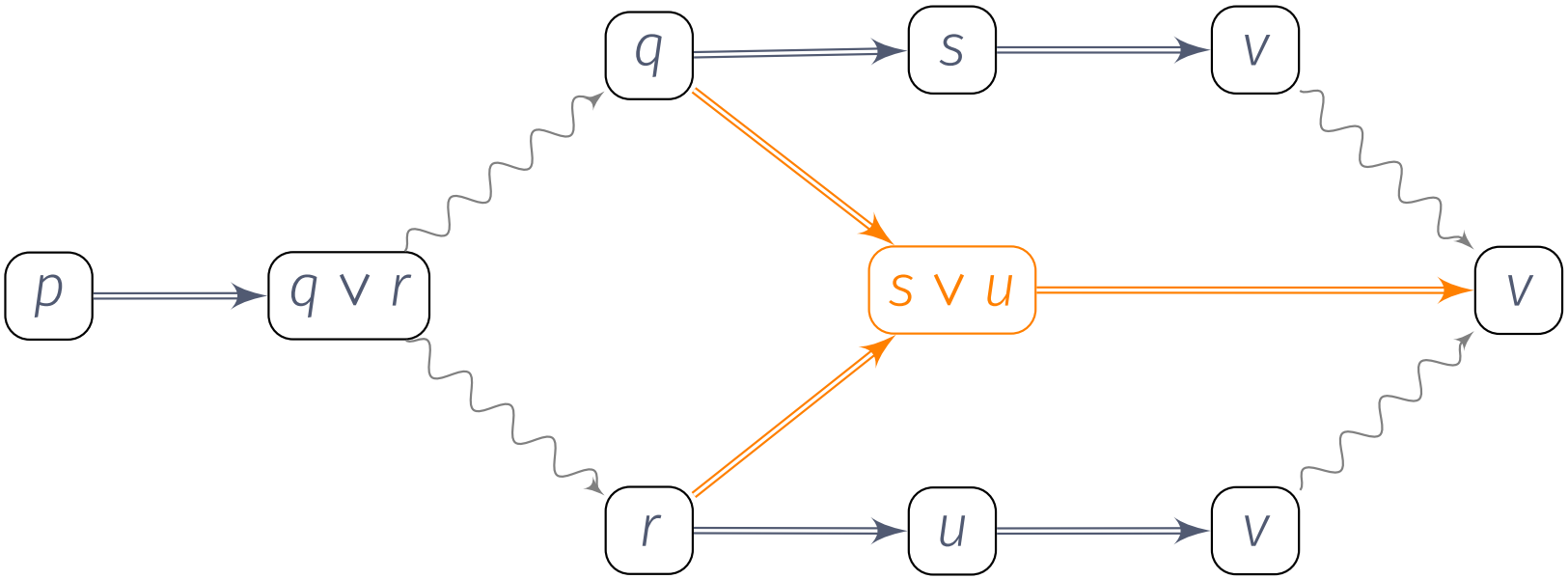

- by (OR): from $s \Rightarrow v$ and $u \Rightarrow v$
- by (Right-Weakening), from $q \Rightarrow s$ and $r \Rightarrow u$

A Problematic Example for OR

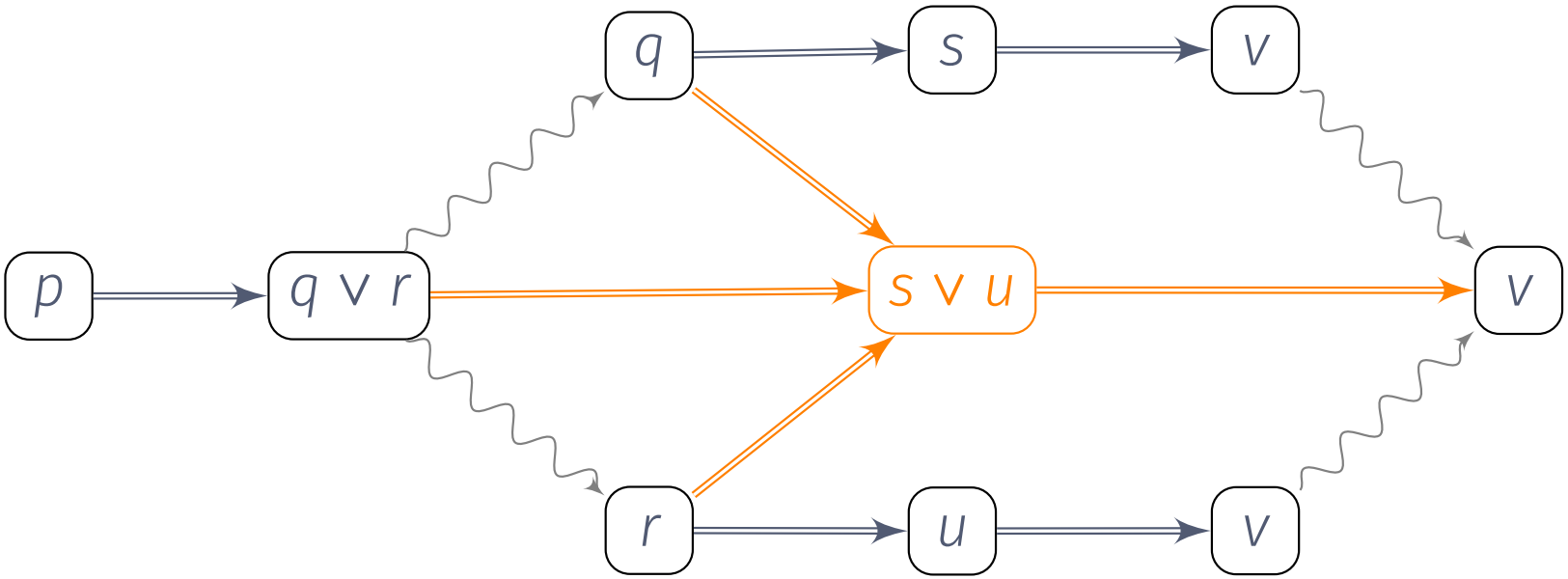

- by (OR): from $s \Rightarrow v$ and $u \Rightarrow v$
- by (Right-Weakening), from $q \Rightarrow s$ and $r \Rightarrow u$
- by (OR): from $q \Rightarrow s \vee u$ and $r \Rightarrow s \vee u$

A Problematic Example for OR

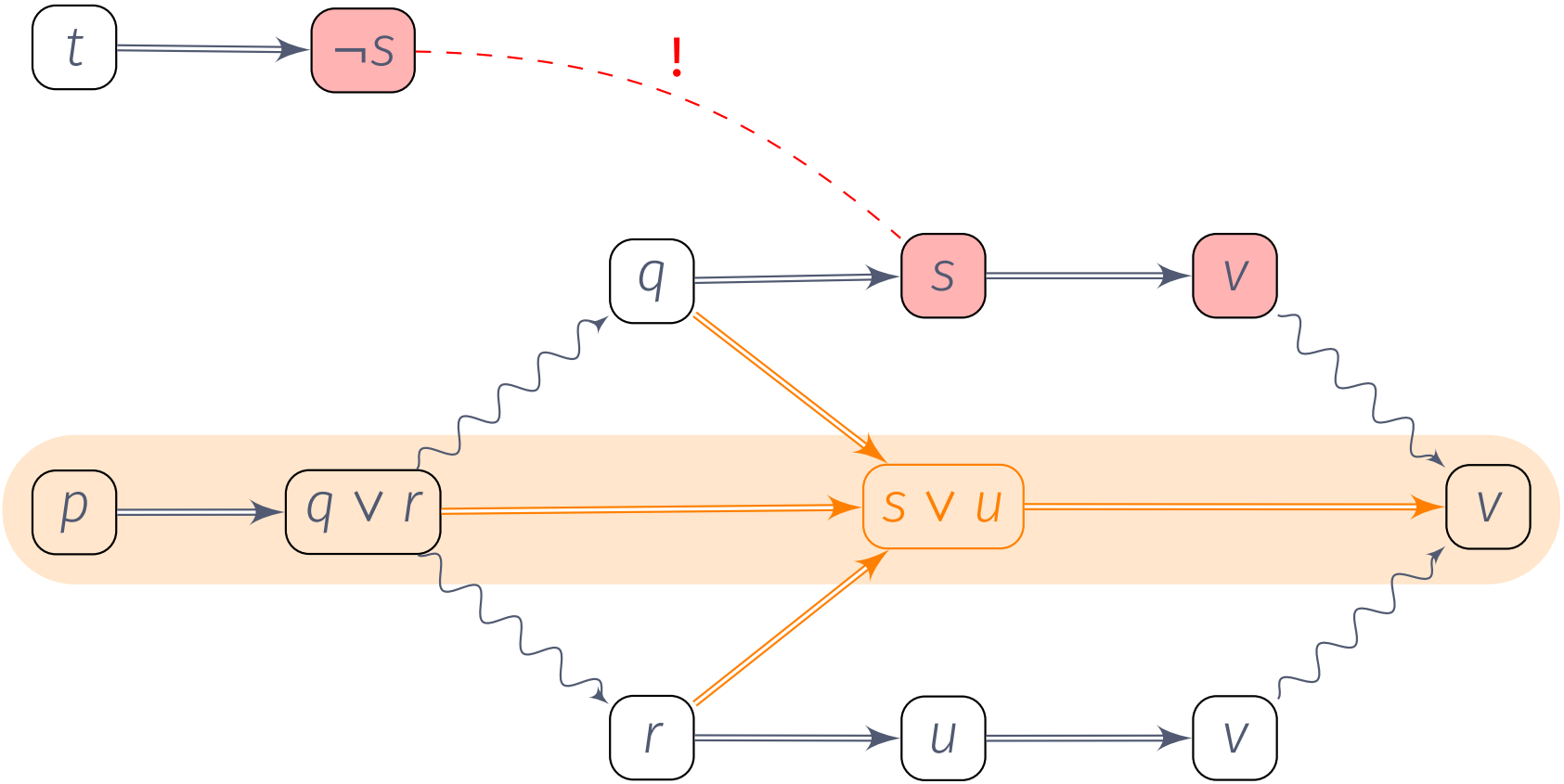

- Suppose now we also have t and $t \Rightarrow \neg s$.
- the possible defeater has no effect on the generalized path

A Problematic Example for OR

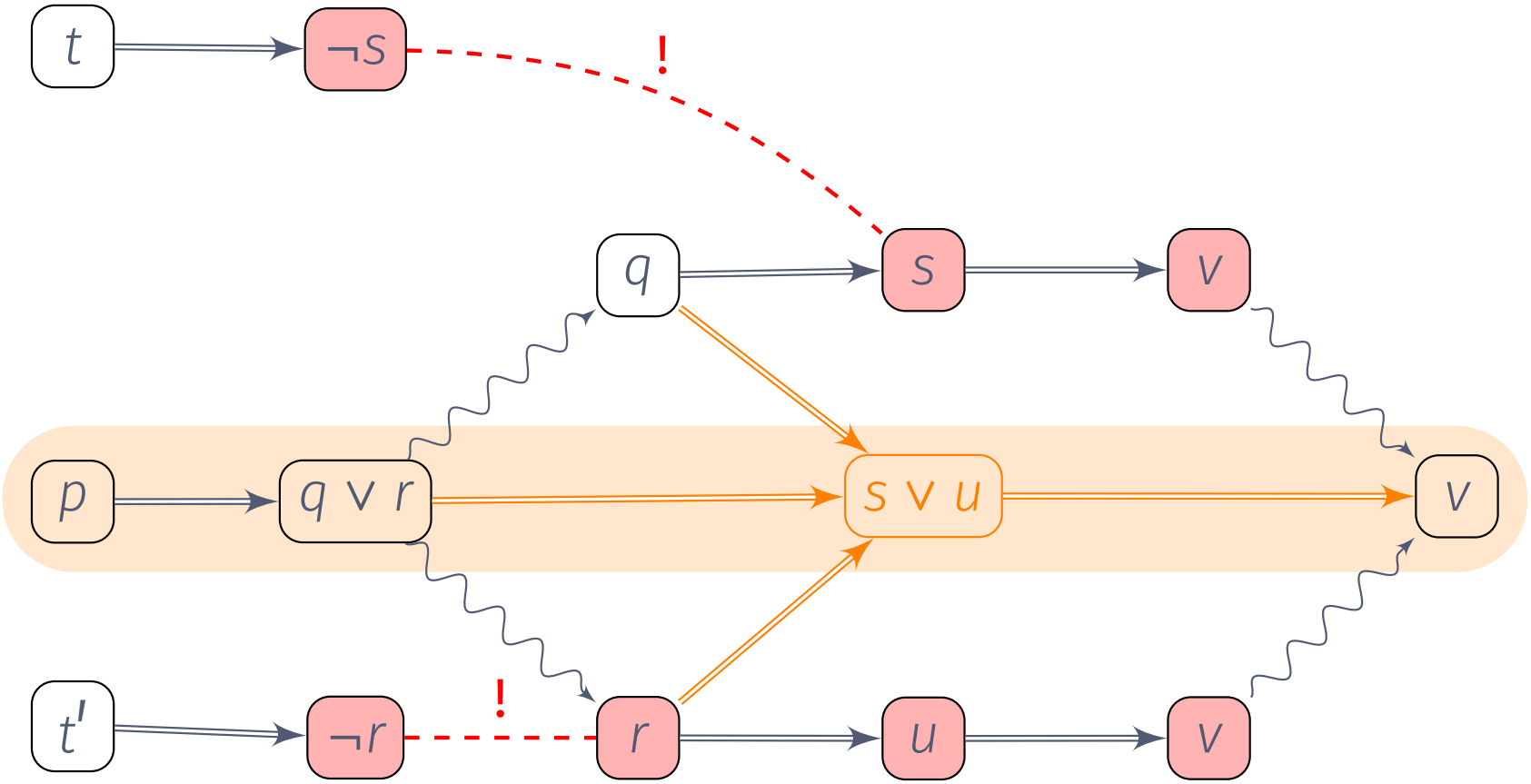

- Suppose now we also have t' and $t' \Rightarrow \neg r$.
- the additional possible defeater has no effect on the generalized path

Extension-based Approaches: Default Logic (Reiter)

- Input: set of defaults and a set of formulas ("facts")
- Build extensions by applying Modus Ponens to defaults while maintaining consistency

Extension-based Approaches: Default Logic (Reiter)

- Input: set of defaults and a set of formulas ("facts")
- Build extensions by applying Modus Ponens to defaults while maintaining consistency
- For instance:

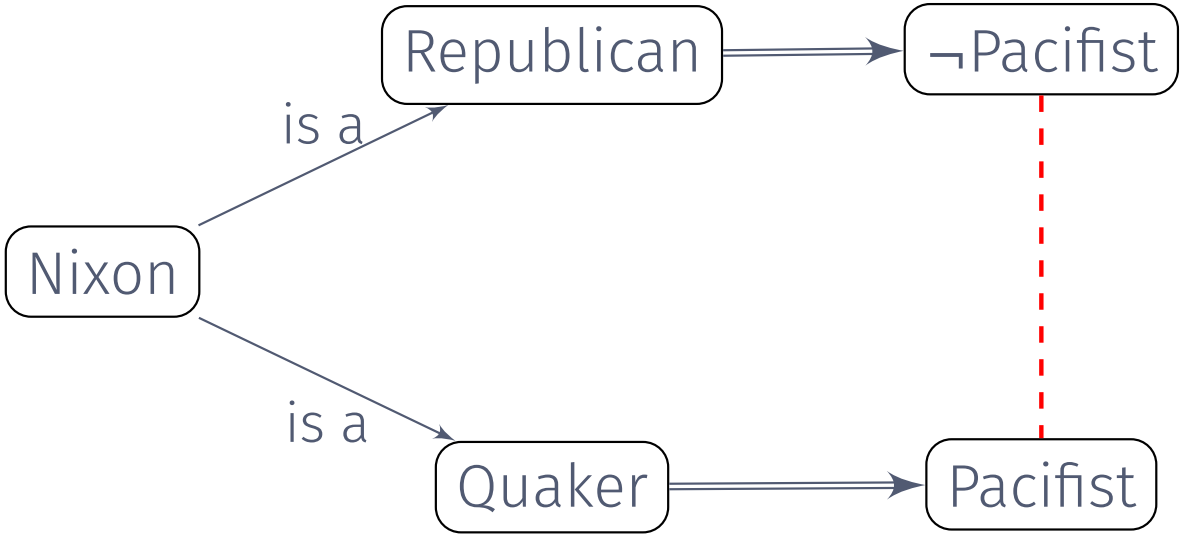

Extension-based Approaches: Default Logic (Reiter)

- Input: set of defaults and a set of formulas ("facts")
- Build extensions by applying Modus Ponens to defaults while maintaining consistency
- For instance:

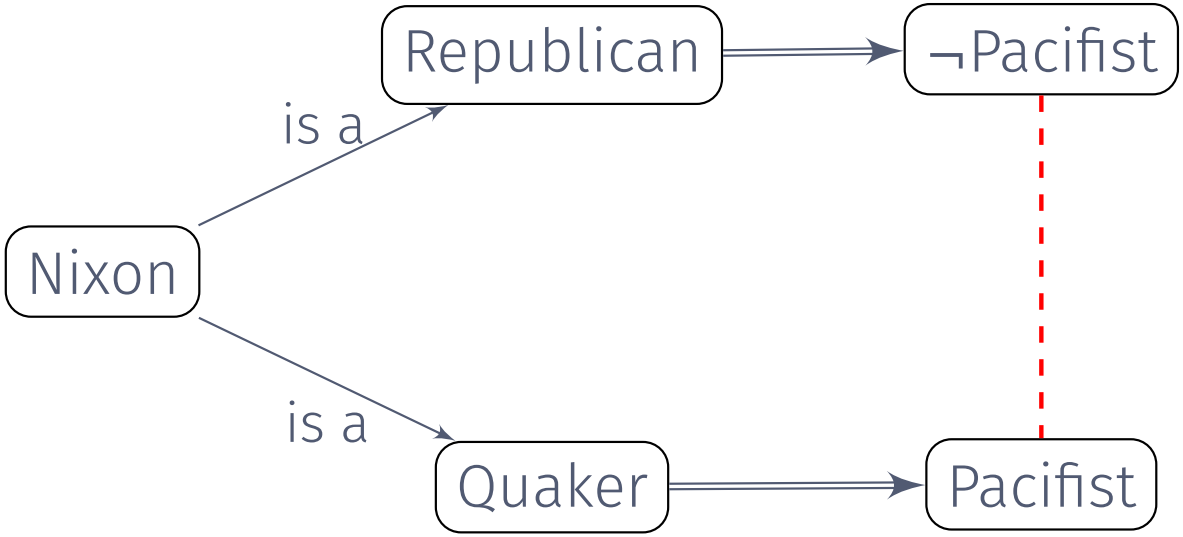

- Extensions:
  1. {Nixon, Republican, Quaker, ¬Pacifist}
  2. {Nixon, Republican, Quaker, Pacifist}

Extension-based Approaches: Default Logic (Reiter)

- no handling of disjunctive facts "out-of-the-box"
- for instance: $\Sigma = \{\text{Republican} \vee \text{Democrat}, \text{Republican} \Rightarrow \text{political}, \text{Democrat} \Rightarrow \text{political}\}$.

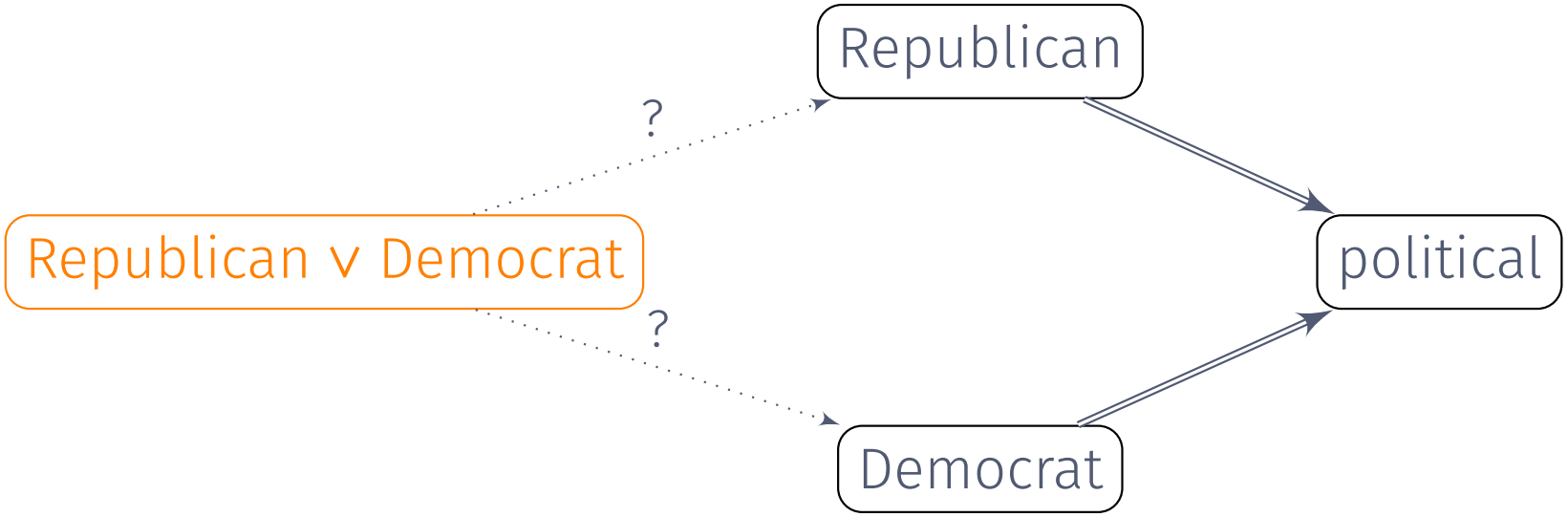

- since the default is not triggered by the fact, MP cannot be applied

Extension-based Approaches: Default Logic (Reiter)

- idea: split the factual part of the knowledge base (Gelfond, Lifschitz, Przymusinska, 1991)

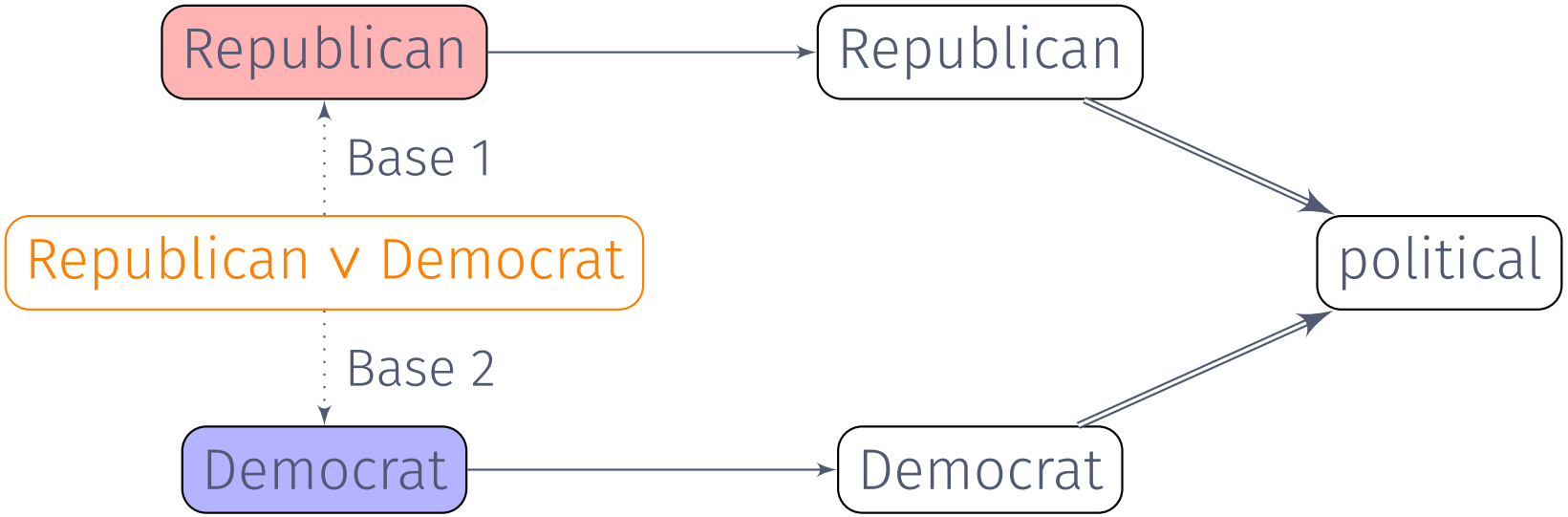

Extension-based Approaches: Default Logic (Reiter)

- idea: split the factual part of the knowledge base (Gelfond, Lifschitz, Przymusinska, 1991)

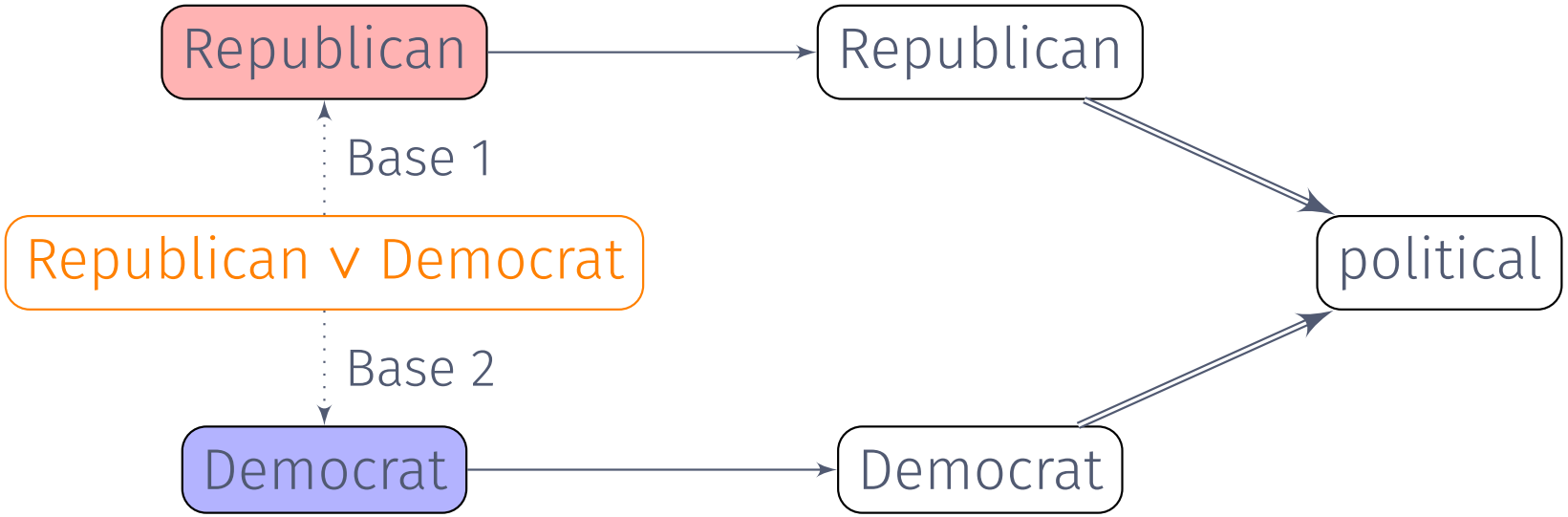

- two extensions:
  1. Republican, political
  2. Democrat, political

Problematic Example for Disjunctive Defaults

Consider the following example:

1. Either his left hand or his right hand is broken. $\boxed{\text{lhb} \vee \text{rhb}}$

Problematic Example for Disjunctive Defaults

Consider the following example:

1. Either his left hand or his right hand is broken. $\boxed{\text{lhb} \vee \text{rhb}}$
2. If somebody writes legibly then usually the right hand is not broken. $\boxed{\text{wl} \Rightarrow \neg\text{rhb}}$

Problematic Example for Disjunctive Defaults

Consider the following example:

1. Either his left hand or his right hand is broken. $\boxed{\text{lhb} \vee \text{rhb}}$
2. If somebody writes legibly then usually the right hand is not broken. $\boxed{\text{wl} \Rightarrow \neg\text{rhb}}$
3. He writes legibly. $\boxed{\text{wl}}$

Problematic Example for Disjunctive Defaults

Consider the following example:

1. Either his left hand or his right hand is broken. $\boxed{lhb \vee rhb}$
2. If somebody writes legibly then usually the right hand is not broken. $\boxed{wl \Rightarrow \neg rhb}$
3. He writes legibly. $\boxed{wl}$

With disjunctive default logic we get two extensions:

1. wl, ¬rhb, lhb
2. wl, rhb

1. Either he's a left-hander or a right-hander. ($\mathrm{lh} \vee \mathrm{rh}$)
2. Usually he's not a left-hander. ($\top \Rightarrow \neg \mathrm{lh}$)

General Stratagem

So far: Manipulate the database!

1. produce new defeasible rules from the given ones; or
2. produce new factual knowledge bases when confronted with disjunctive information (by “splitting up” the given knowledge base)

Enters: the Argumentative Approach

- Instead of manipulating the knowledge base and reasoning on top of the manipulated database,
- we will, in what follows, use a more direct approach to the modeling of Reasoning by Cases in the context of defeasible reasoning, following the inference scheme:

$$\frac{A \vee B \quad A \Rightarrow \cdots \Rightarrow C \quad B \Rightarrow \cdots \Rightarrow C}{C}$$

or, more generally:

$$\frac{A \vee B \quad A \mid\!\sim C \quad B \mid\!\sim C}{C}$$

- This will allow us to have more control over defeating conditions ...
- ... and to avoid pitfalls as the ones demonstrated above.

Structured Argumentation

The Argumentative Approach to Defeasible Reasoning

- *monotonic logic*: all about support and reasons
- *defeasible reasoning*: possibility of defeat
- formal argumentation: division of labor
  - rule system: generate arguments
  - argumentation semantics: take care of defeat

The Abstract Dung-Semantics i (Dung, 1995)

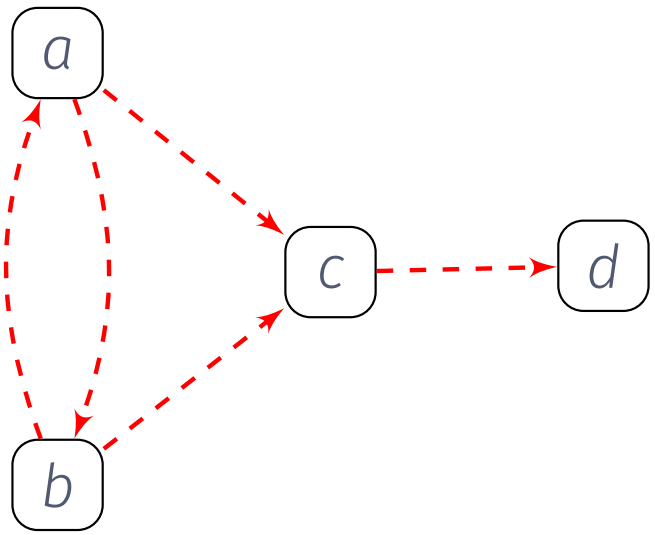

- abstract away from content of arguments
- argumentation framework: $\langle \text{Args}, \text{Attacks} \rangle$ (directed graph)

The Abstract Dung-Semantics i (Dung, 1995)

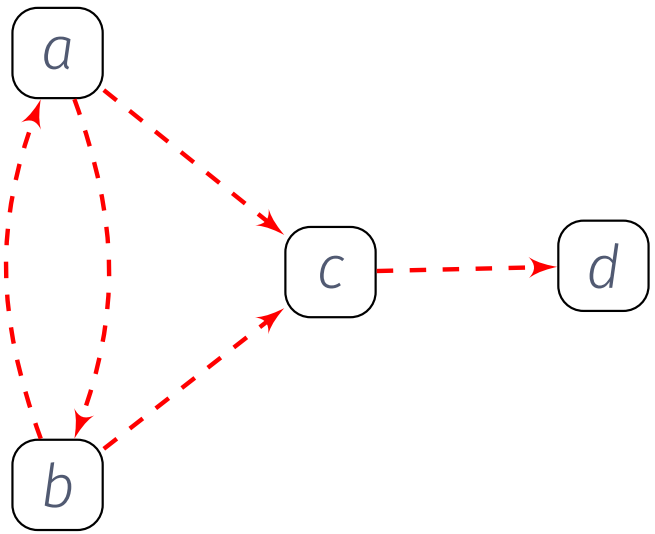

- abstract away from content of arguments
- argumentation framework: $\langle \text{Args}, \text{Attacks} \rangle$ (directed graph)
- determine selections of arguments that represent stances of rational reasoners in the respective debate

The Abstract Dung-Semantics i (Dung, 1995)

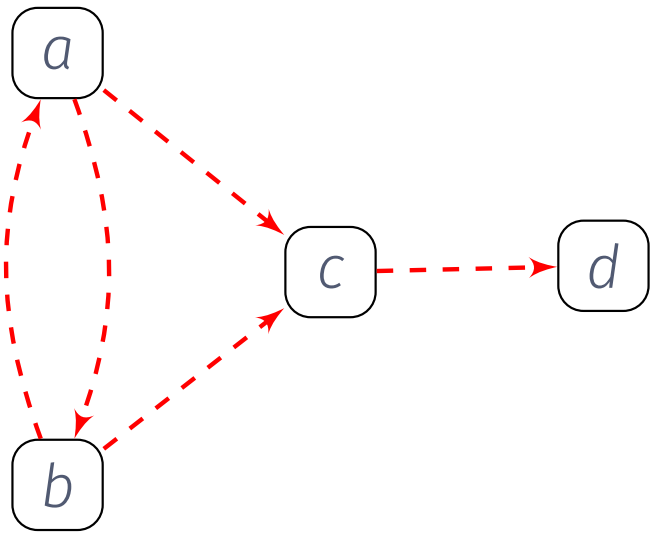

- abstract away from content of arguments
- argumentation framework: $\langle \text{Args}, \text{Attacks} \rangle$ (directed graph)
- determine selections of arguments that represent stances of rational reasoners in the respective debate
- requirements, e.g.,

The Abstract Dung-Semantics i (Dung, 1995)

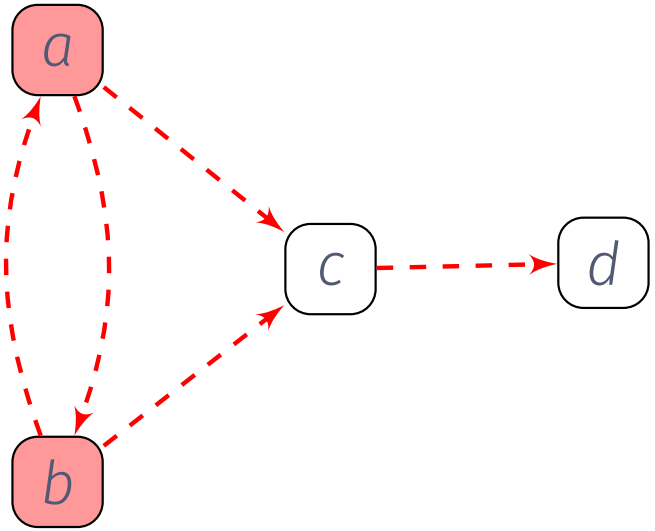

- abstract away from content of arguments
- argumentation framework: $\langle \text{Args}, \text{Attacks} \rangle$ (directed graph)
- determine selections of arguments that represent stances of rational reasoners in the respective debate
- requirements, e.g.,
  - conflict-free

The Abstract Dung-Semantics i (Dung, 1995)

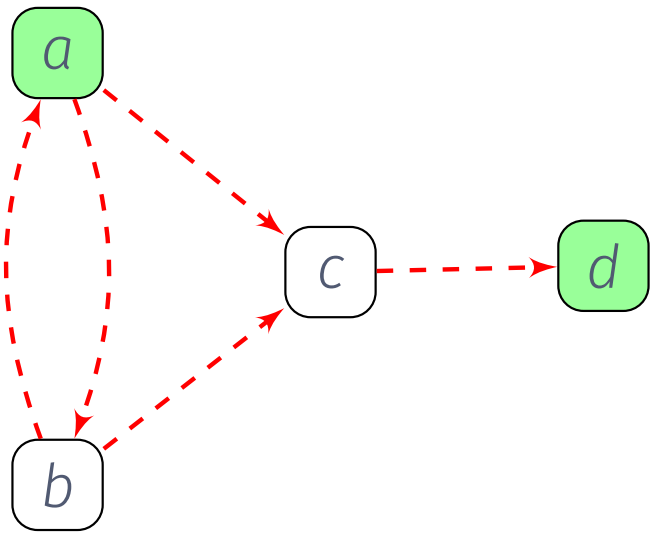

- abstract away from content of arguments
- argumentation framework: $\langle \text{Args}, \text{Attacks} \rangle$ (directed graph)
- determine selections of arguments that represent stances of rational reasoners in the respective debate
- requirements, e.g.,
  - conflict-free

The Abstract Dung-Semantics i (Dung, 1995)

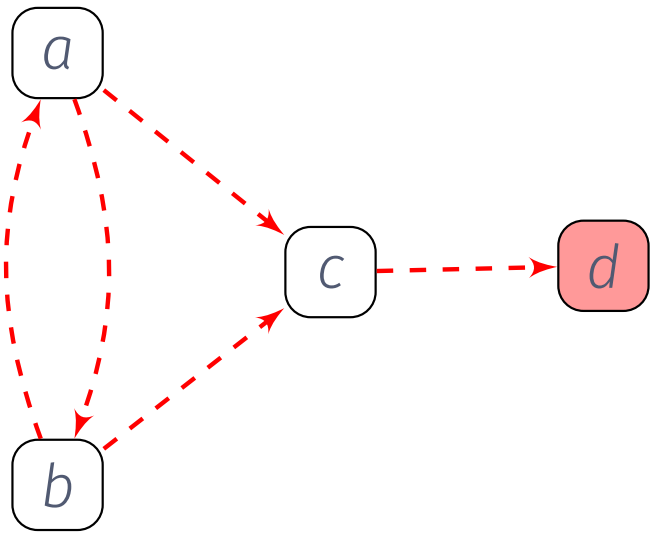

- abstract away from content of arguments
- argumentation framework: $\langle \text{Args}, \text{Attacks} \rangle$ (directed graph)
- determine selections of arguments that represent stances of rational reasoners in the respective debate
- requirements, e.g.,
  - conflict-free
  - admissible (each argument can be defended)

The Abstract Dung-Semantics i (Dung, 1995)

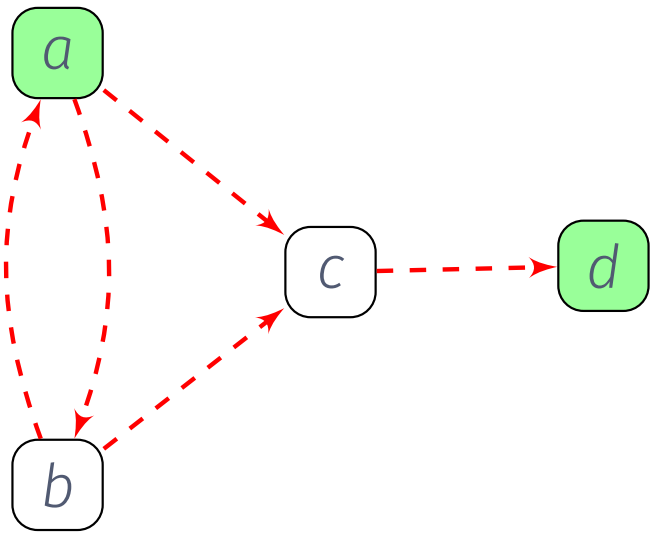

- abstract away from content of arguments
- argumentation framework: $\langle \text{Args}, \text{Attacks} \rangle$ (directed graph)
- determine selections of arguments that represent stances of rational reasoners in the respective debate
- requirements, e.g.,
  - conflict-free
  - admissible (each argument can be defended)

Grounded Semantics

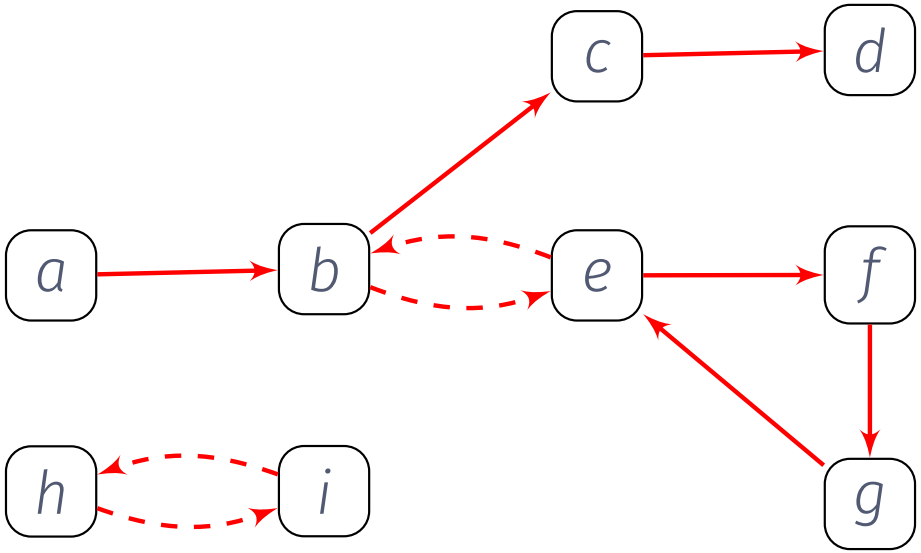

Grounded Semantics

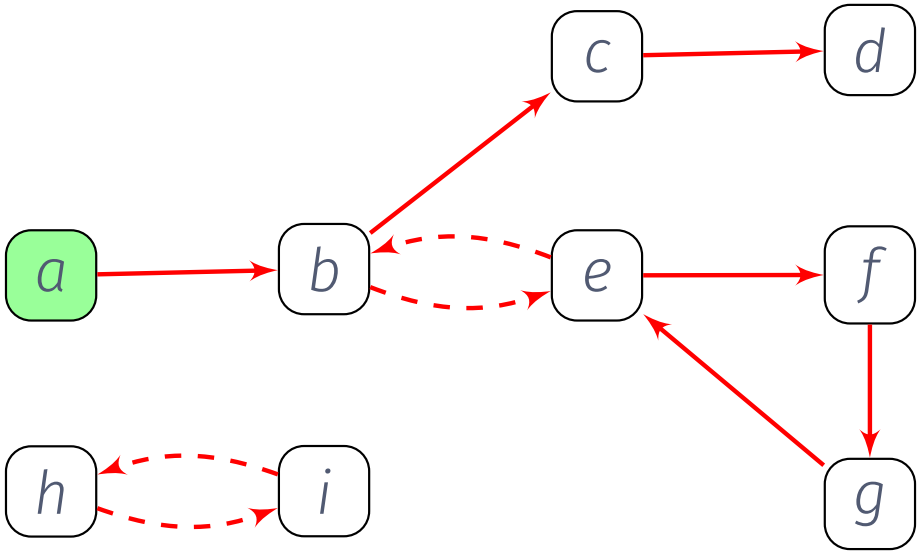

- first select unattacked arguments

Grounded Semantics

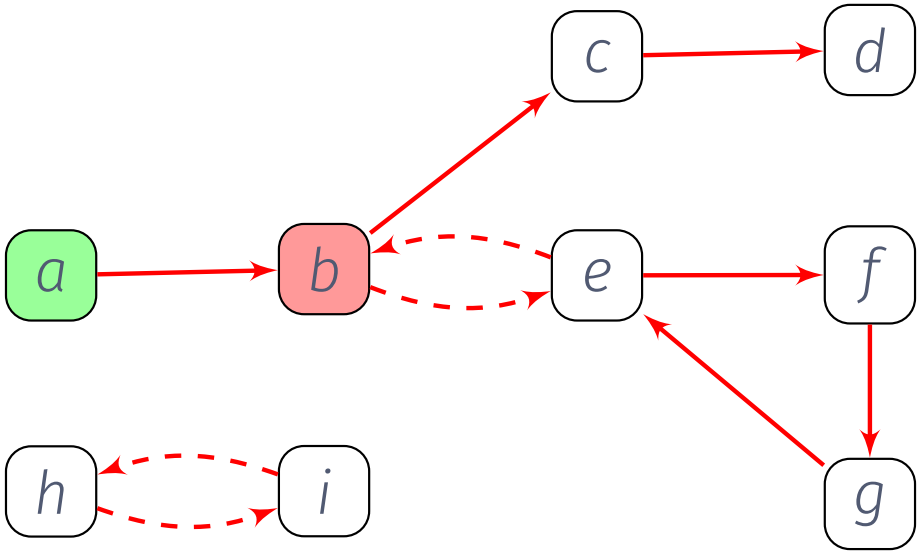

- first select unattacked arguments
- remove the arguments attacked by the selected arguments

Grounded Semantics

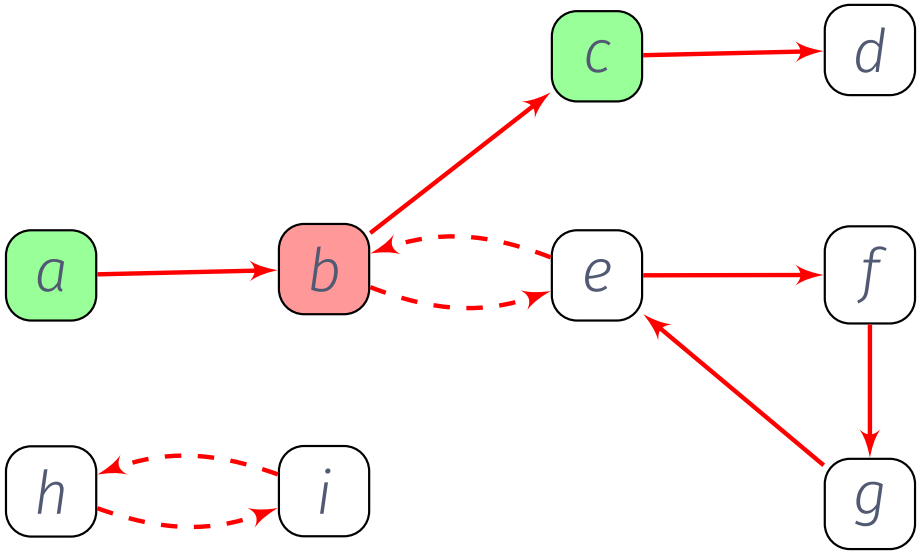

- first select unattacked arguments
- remove the arguments attacked by the selected arguments
- select unattacked arguments

Grounded Semantics

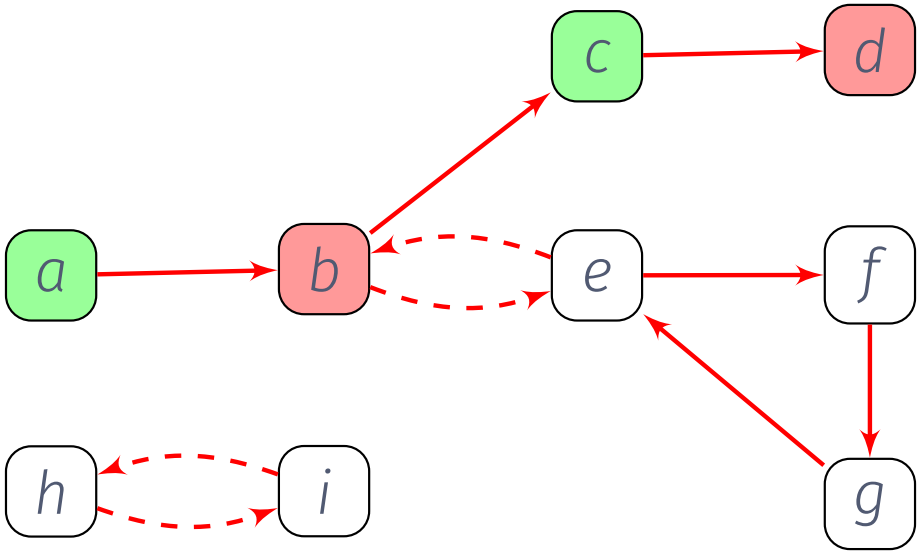

- first select unattacked arguments
- remove the arguments attacked by the selected arguments
- select unattacked arguments
- remove the arguments attacked by the selected arguments

Grounded Semantics

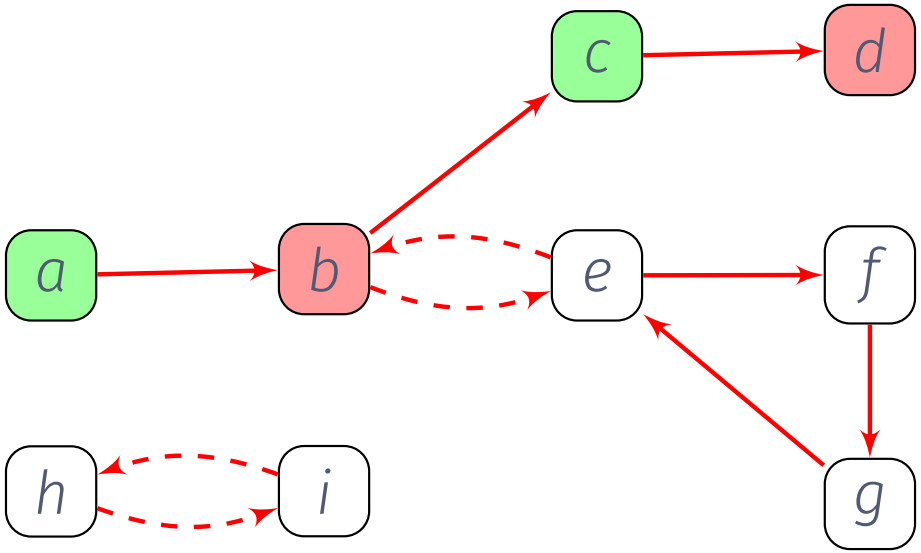

- first select unattacked arguments
- remove the arguments attacked by the selected arguments
- select unattacked arguments
- remove the arguments attacked by the selected arguments
- and so on ... until fixed point is reached

Away with the abstraction! Structured Argumentation ...

The landscape of structured argumentation

1. Deductive argumentation
   1.1 no defeasible rules, no defeasible premises
   1.2 semi-abstract: arguments have form (Γ, A) where $\Gamma \vdash A$ for appropriate $\vdash$
   1.3 e.g.: Besnard & Hunter, Arieli & Straßer
2. Assumption-based argumentation (Dung, Kowalski, Toni)
   2.1 no defeasible rules but defeasible premises
   2.2 semi-abstract: arguments are sets of defeasible premises
3. Rule/Proof-based argumentation
   3.1 strict and defeasible rules
   3.2 non-abstract: arguments as proofs
   3.3 ASPIC (Prakken, Modgil, ...)

Argumentation Theories (simplified)

... consist of

- a set $\mathcal{S}$ of strict rules of the form $\phi_1, \ldots, \phi_n \rightarrow \psi$ (in this talk: $\phi_1, \ldots, \phi_n \rightarrow \psi$ iff $\phi_1, \ldots, \phi_n \vdash_{\mathsf{CL}} \psi$)

Argumentation Theories (simplified)

... consist of

- a set $\mathcal{S}$ of strict rules of the form $\phi_1, \ldots, \phi_n \rightarrow \psi$ (in this talk: $\phi_1, \ldots, \phi_n \rightarrow \psi$ iff $\phi_1, \ldots, \phi_n \vdash_{\mathsf{CL}} \psi$)
- a set $\mathcal{D}$ of defeasible rules of the form $\phi_1, \ldots, \phi_n \Rightarrow \psi$

Argumentation Theories (simplified)

... consist of

- a set $\mathcal{S}$ of strict rules of the form $\phi_1, \ldots, \phi_n \rightarrow \psi$ (in this talk: $\phi_1, \ldots, \phi_n \rightarrow \psi$ iff $\phi_1, \ldots, \phi_n \vdash_{\mathsf{CL}} \psi$)
- a set $\mathcal{D}$ of defeasible rules of the form $\phi_1, \ldots, \phi_n \Rightarrow \psi$
- a set $\mathcal{K}$ of premises ("facts") (formulas without occurrences of $\rightarrow$ and $\Rightarrow$)

Example

Let the argumentation theory $\mathsf{T} = \langle \mathcal{S}, \mathcal{D}, \mathcal{K} \rangle$ consist of:

- $\mathcal{S} = \{\phi_1, \ldots, \phi_n \rightarrow \psi \mid \phi_1, \ldots, \phi_n \vdash_{\mathsf{CL}} \psi\}$
- $\mathcal{D} = \{p \Rightarrow q \vee r, q \Rightarrow s, s \Rightarrow v, r \Rightarrow u, u \Rightarrow v, t \Rightarrow \neg s\}$
- $\mathcal{K} = \{p, t\}$.

Idea: Arguments as proof trees.

Arguments provided by an argumentation theory

In a nutshell: T-arguments are proof trees based on $T = \langle \mathcal{S}, \mathcal{D}, \mathcal{K} \rangle$.

Arguments provided by an argumentation theory

In a nutshell: T-arguments are proof trees based on $T = \langle \mathcal{S}, \mathcal{D}, \mathcal{K} \rangle$.

In detail:

- for every $\phi \in \mathcal{K}$, $A = \langle \phi \rangle$ is an argument with conclusion $\mathrm{Conc}(A) = \phi$ and the only subargument $\mathrm{Sub}(A) = \{\phi\}$
- for all arguments $A_1, \ldots, A_n$,
  - if $\mathrm{Con}(A_1), \ldots, \mathrm{Con}(A_n) \rightarrow \psi \in \mathcal{S}$ then $A = \langle A_1, \ldots, A_n \rightarrow \psi \rangle$ is an argument for which $\mathrm{Conc}(A) = \psi$ and $\mathrm{Sub}(A) = \{A\} \cup \mathrm{Sub}(A_1) \cup \cdots \cup \mathrm{Sub}(A_n)$
  - if $\mathrm{Con}(A_1), \ldots, \mathrm{Conc}(A_n) \Rightarrow \psi \in \mathcal{D}$ then $A = \langle A_1, \ldots, A_n \Rightarrow \psi \rangle$ is an argument for which $\mathrm{Con}(A) = \psi$ and $\mathrm{Sub}(A) = \{A\} \cup \mathrm{Sub}(A_1) \cup \cdots \cup \mathrm{Sub}(A_n)$

Arguments provided by an argumentation theory

In a nutshell: T-arguments are proof trees based on $T = \langle \mathcal{S}, \mathcal{D}, \mathcal{K} \rangle$.

In detail:

- for every $\phi \in \mathcal{K}$, $A = \langle \phi \rangle$ is an argument with conclusion $\mathrm{Conc}(A) = \phi$ and the only subargument $\mathrm{Sub}(A) = \{\phi\}$
- for all arguments $A_1, \ldots, A_n$,
  - if $\mathrm{Con}(A_1), \ldots, \mathrm{Con}(A_n) \rightarrow \psi \in \mathcal{S}$ then $A = \langle A_1, \ldots, A_n \rightarrow \psi \rangle$ is an argument for which $\mathrm{Conc}(A) = \psi$ and $\mathrm{Sub}(A) = \{A\} \cup \mathrm{Sub}(A_1) \cup \cdots \cup \mathrm{Sub}(A_n)$
  - if $\mathrm{Con}(A_1), \ldots, \mathrm{Conc}(A_n) \Rightarrow \psi \in \mathcal{D}$ then $A = \langle A_1, \ldots, A_n \Rightarrow \psi \rangle$ is an argument for which $\mathrm{Con}(A) = \psi$ and $\mathrm{Sub}(A) = \{A\} \cup \mathrm{Sub}(A_1) \cup \cdots \cup \mathrm{Sub}(A_n)$

We write $\mathrm{Arg}(T)$ for the set of all arguments based on T.

The dialectic tier of argumentation: attacks!

Argumentative Attacks

ASPIC provides several attack forms such as rebuts and undercuts. Here we restrict ourselves to the former.

Where $A, B \in \mathrm{Arg}(T)$, a rebuts $B = \langle B_1, \ldots, B_n \Rightarrow \psi \rangle$ if

- $\mathrm{Con}(A) = \neg\psi$ or $\psi = \neg\mathrm{Conc}(A)$ or
- there is a $B' \in \mathrm{Sub}(B)$ such that A rebuts B'.

Argumentation framework based on T and $|\sim$

- The argumentation framework AF based on T is given by $\langle \mathrm{Arg}(T), \mathrm{Attack}(T) \rangle$.

Argumentation framework based on T and $|\sim$

- The argumentation framework AF based on T is given by $\langle \mathrm{Arg}(T), \mathrm{Attack}(T) \rangle$.
- This is used to define a consequence relation, e.g., as follows:

$$T \mid\sim \phi \text{ iff there is a grounded argument } A \in \mathrm{Arg}(T) \text{ with } \mathrm{Conc}(A) = \phi.$$

Time for an example!

- $\mathcal{D} = \{p \Rightarrow q \vee r, q \Rightarrow s, s \Rightarrow v, r \Rightarrow u, u \Rightarrow v, t \Rightarrow \neg s\}$
- $\mathcal{K} = \{p, t, q\}$.

- $\mathcal{D} = \{p \Rightarrow q \vee r, q \Rightarrow s, s \Rightarrow v, r \Rightarrow u, u \Rightarrow v, t \Rightarrow \neg s\}$
- $\mathcal{K} = \{p, t, q\}$.

We have, e.g., the arguments:

- $A_1 = \langle q \rangle, A_2 = \langle r \rangle, A_3' = \langle t \rangle$
- $A_3 = \langle \langle t \rangle \Rightarrow \neg s \rangle$
- $A_4 = \langle \langle q \rangle \Rightarrow s \rangle$
- $A_5 = \langle A_4 \Rightarrow v \rangle$
- $A_6 = \langle \langle r \rangle \Rightarrow u \rangle$
- $A_7 = \langle A_6 \Rightarrow v \rangle$

Abstract perspective:

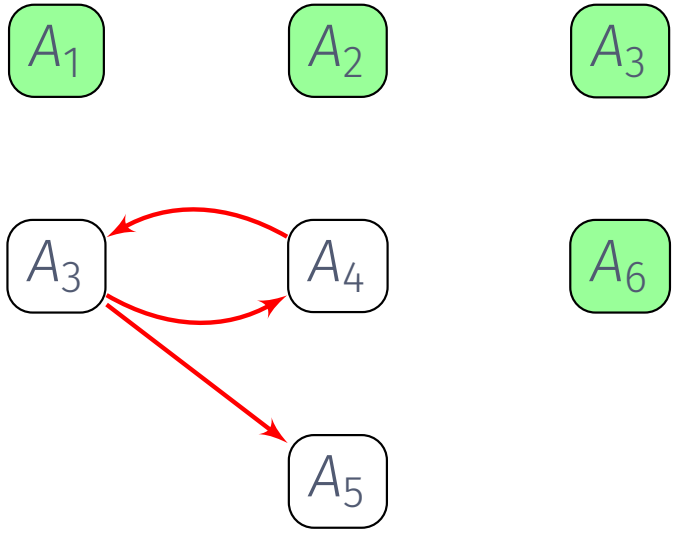

- $\mathcal{D} = \{p \Rightarrow q \vee r, q \Rightarrow s, s \Rightarrow v, r \Rightarrow u, u \Rightarrow v, t \Rightarrow \neg s\}$
- $\mathcal{K} = \{p, t, q\}$.

We have, e.g., the arguments:

- $A_1 = \langle q \rangle, A_2 = \langle r \rangle, A_3 = \langle t \rangle$
- $A_3 = \langle \langle t \rangle \Rightarrow \neg s \rangle$
- $A_4 = \langle \langle q \rangle \Rightarrow s \rangle$
- $A_5 = \langle A_4 \Rightarrow v \rangle$
- $A_6 = \langle \langle r \rangle \Rightarrow u \rangle$
- $A_7 = \langle A_6 \Rightarrow v \rangle$

More structured perspective:

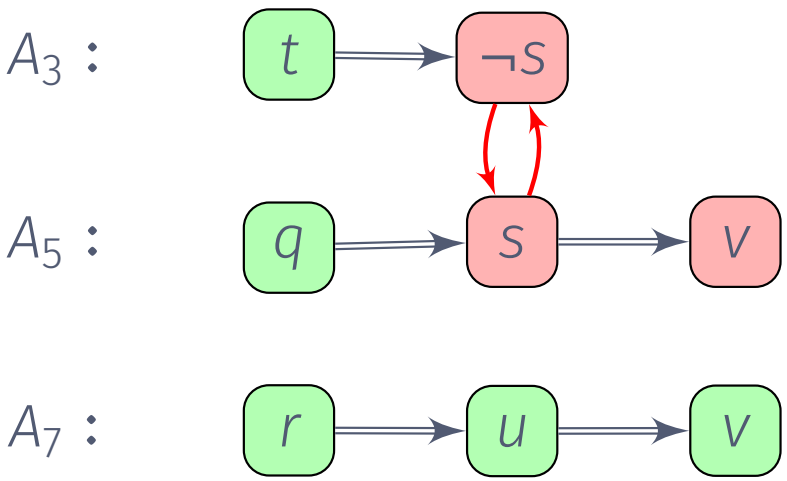

Intermezzo: contamination and its cures.

Intermezzo: The Contaminating Power of Inconsistent Arguments

- Suppose $\mathcal{D} = \{\Rightarrow p, \Rightarrow \neg p, \Rightarrow s\}$ and $\mathcal{K} = \varnothing$

Intermezzo: The Contaminating Power of Inconsistent Arguments

- Suppose $\mathcal{D} = \{\Rightarrow p, \Rightarrow \neg p, \Rightarrow s\}$ and $\mathcal{K} = \varnothing$
- In this case we clearly want s to be a consequence.

Intermezzo: The Contaminating Power of Inconsistent Arguments

- Suppose $\mathcal{D} = \{\Rightarrow p, \Rightarrow \neg p, \Rightarrow s\}$ and $\mathcal{K} = \varnothing$
- In this case we clearly want s to be a consequence.
- Let's see what happens. We have, for instance, the arguments:

Intermezzo: The Contaminating Power of Inconsistent Arguments

- Suppose $\mathcal{D} = \{\Rightarrow p, \Rightarrow \neg p, \Rightarrow s\}$ and $\mathcal{K} = \varnothing$
- In this case we clearly want s to be a consequence.
- Let's see what happens. We have, for instance, the arguments:

- $a_p = \langle \Rightarrow p \rangle$
- $a_{\neg p} = \langle \Rightarrow \neg p \rangle$
- $a_s = \langle \Rightarrow s \rangle$
- $a_\perp = \langle a_p, a_{\neg p} \rightarrow \neg s \rangle$

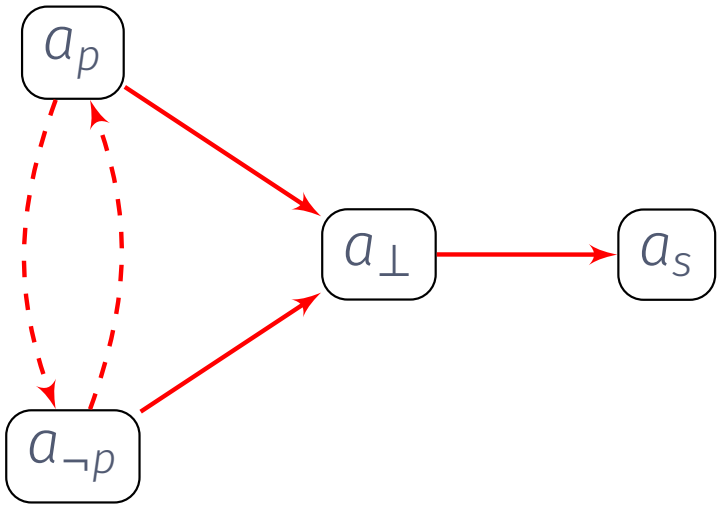

Solutions to this problem i

- Filter out inconsistent arguments (Wu, PhD, 2012)
- “Fact-attack” inconsistent arguments (here)
- Generalized Rebut (Jesse’s talk)
- When is an argument inconsistent?

Solutions to this problem i

- Filter out inconsistent arguments (Wu, PhD, 2012)
- "Fact-attack" inconsistent arguments (here)
- Generalized Rebut (Jesse's talk)
- When is an argument inconsistent?

Definition

Where $A \in \mathrm{Arg}(T)$ we define $\dagger(A)$ as inductively follows:

- $\dagger(\langle \phi \rangle) = \phi$
- $\dagger(\langle A_1, \ldots, A_n \rightarrow \phi \rangle) = \dagger(A_1) \wedge \cdots \wedge \dagger(A_n)$
- $\dagger(\langle A_1, \ldots, A_n \Rightarrow \phi \rangle) = \dagger(A_1) \wedge \cdots \wedge \dagger(A_n) \wedge \phi$

Definition

An argument $A \in \mathrm{Arg}(T)$ is inconsistent iff $\mathcal{K} \vdash \neg\dagger(A)$.

Definition

Where $A \in \mathrm{Arg}(T)$ we define $\dagger(A)$ as inductively follows:

- $\dagger(\langle \phi \rangle) = \phi$
- $\dagger(\langle A_1, \ldots, A_n \rightarrow \phi \rangle) = \dagger(A_1) \wedge \cdots \wedge \dagger(A_n)$
- $\dagger(\langle A_1, \ldots, A_n \Rightarrow \phi \rangle) = \dagger(A_1) \wedge \cdots \wedge \dagger(A_n) \wedge \phi$

Definition

An argument $A \in \mathrm{Arg}(T)$ is inconsistent iff $\mathcal{K} \vdash \neg\dagger(A)$.

Definition

A strict argument[1] $A \in \mathrm{Arg}(T)$ fact-attacks some argument $B \in \mathrm{Arg}(T)$ iff $\mathrm{Conc}(A) = \neg\dagger(B)$.

[1] An argument is strict if it doesn't have any defeasible rules.

Reasoning by Cases in Structured Argumentation

A New Type of Argument: RbC-Arguments

Basic idea: Given

- an argumentation theory $T = \langle \mathcal{D}, \mathcal{K} \rangle$,[2]

[2] Since in this talk the strict rules $\mathcal{S}$ will always be provided by classical logic, we will not mention them anymore.

A New Type of Argument: RbC-Arguments

Basic idea: Given

- an argumentation theory $T = \langle \mathcal{D}, \mathcal{K} \rangle$,[2]
- an argument $A \in \mathrm{Arg}(T)$ for which $\mathrm{Conc}(A) = \phi_1 \vee \phi_2$,

[2] Since in this talk the strict rules $\mathcal{S}$ will always be provided by classical logic, we will not mention them anymore.

A New Type of Argument: RbC-Arguments

Basic idea: Given

- an argumentation theory $T = \langle \mathcal{D}, \mathcal{K} \rangle$,[2]
- an argument $A \in \mathrm{Arg}(T)$ for which $\mathrm{Conc}(A) = \phi_1 \vee \phi_2$,
- an argument $A_1[\phi_1] \in \mathrm{Arg}(\langle \mathcal{D}, \mathcal{K} \rangle)$ with $\mathrm{Conc}(A_1) = \psi$, and

[2] Since in this talk the strict rules $\mathcal{S}$ will always be provided by classical logic, we will not mention them anymore.

A New Type of Argument: RbC-Arguments

Basic idea: Given

- an argumentation theory $T = \langle \mathcal{D}, \mathcal{K} \rangle$,[2]
- an argument $A \in \mathrm{Arg}(T)$ for which $\mathrm{Conc}(A) = \phi_1 \vee \phi_2$,
- an argument $A_1[\phi_1] \in \mathrm{Arg}(\langle \mathcal{D}, \mathcal{K} \rangle)$ with $\mathrm{Conc}(A_1) = \psi$, and
- an argument $A_2[\phi_2] \in \mathrm{Arg}(\langle \mathcal{D}, \mathcal{K} \rangle)$ with $\mathrm{Conc}(A_2) = \psi$,

[2] Since in this talk the strict rules $\mathcal{S}$ will always be provided by classical logic, we will not mention them anymore.

A New Type of Argument: RbC-Arguments

Basic idea: Given

- an argumentation theory $T = \langle \mathcal{D}, \mathcal{K} \rangle$,[2]
- an argument $A \in \mathrm{Arg}(T)$ for which $\mathrm{Conc}(A) = \phi_1 \vee \phi_2$,
- an argument $A_1[\phi_1] \in \mathrm{Arg}(\langle \mathcal{D}, \mathcal{K} \rangle)$ with $\mathrm{Conc}(A_1) = \psi$, and
- an argument $A_2[\phi_2] \in \mathrm{Arg}(\langle \mathcal{D}, \mathcal{K} \rangle)$ with $\mathrm{Conc}(A_2) = \psi$,

we introduce a new RbC-Argument

$$\boxed{\langle A, A_1[\phi_1], A_2[\phi_2] \rightsquigarrow \psi \rangle}$$

[2] Since in this talk the strict rules $\mathcal{S}$ will always be provided by classical logic, we will not mention them anymore.

The big picture …

More general: RbC-Argument

Definition (Fact-Introduction)

$A[\varnothing] = \langle\varphi\rangle$ where $\varphi \in \mathcal{F}$

- $\mathrm{Con}(A[\varnothing]) = \varphi$
- $\mathrm{Sub}(A[\varnothing]) = \{A[\varnothing]\}$
- $\mathrm{HSub}(A[\varnothing]) = \varnothing$

Definition (Hypothesis-Introduction)

$A[\{\varphi\}] = [\varphi]$ where $\varphi \in \mathcal{L}$

- $\mathrm{Con}(A[\{\varphi\}]) = \varphi$
- $\mathrm{Sub}(A[\{\varphi\}]) = \{A[\{\varphi\}]\}$
- $\mathrm{HSub}(A[\{\varphi\}]) = \varnothing$

Definition (Arguments with deductive top-rule)

$$A[\Theta] = A_1[\Delta_1], \ldots, A_n[\Delta_n] \rightarrow \varphi$$

where $A_1[\Delta_1], \ldots, A_n[\Delta_n] \in \mathrm{Arg}(AT)$,
$\mathrm{Con}(A_1[\Delta_1]), \ldots, \mathrm{Con}(A_n[\Delta_n]) \rightarrow \varphi \in \mathcal{S}$, and $\Theta = \Delta_1 \cup \ldots \cup \Delta_n$

- $\mathrm{Con}(A[\Theta]) = \varphi$
- $\mathrm{Sub}(A[\Theta]) = \{A[\Theta]\} \cup \mathrm{Sub}(A_1[\Delta_1]) \cup \ldots \cup \mathrm{Sub}(A_n[\Delta_n])$
- $\mathrm{HSub}(A[\Theta]) = \mathrm{HSub}(A_1[\Delta_1]) \cup \ldots \cup \mathrm{HSub}(A_n[\Delta_n])$

Definition (Arguments with defeasible top-rule)

$$A[\Theta] = A_1[\Delta_1], \ldots, A_n[\Delta_n] \Rightarrow \varphi$$

where $A_1[\Delta_1], \ldots, A_n[\Delta_n] \in \mathrm{Arg}(AT)$,
$\mathrm{Con}(A_1[\Delta_1]), \ldots, \mathrm{Con}(A_n[\Delta_n]) \Rightarrow \varphi \in \mathcal{D}$, $\Theta = \Delta_1 \cup \ldots \cup \Delta_n$,
and $\mathrm{HSub}(A_i[\Delta_i]) = \varnothing$ for every $1 \leq i \leq n$.

- $\mathrm{Con}(A[\Theta]) = \varphi$
- $\mathrm{Sub}(A[\Theta]) = \{A[\Theta]\} \cup \mathrm{Sub}(A_1[\Delta_1]) \cup \ldots \cup \mathrm{Sub}(A_n[\Delta_n])$
- $\mathrm{HSub}(A[\Theta]) = \mathrm{HSub}(A_1[\Delta_1]) \cup \ldots \cup \mathrm{HSub}(A_n[\Delta_n])$

Definition (RbC-Arguments)

$$A[\Theta] = A_1[\Theta], A_2[\Delta_2], \ldots, A_n[\Delta_n] \rightsquigarrow \varphi$$

where $n \geq 2$, $\varphi = \bigvee\{\mathrm{Con}(A_2[\Delta_2]), \ldots, \mathrm{Con}(A_n[\Delta_n])\}$, $\mathrm{HSub}(A_1[\Theta]) = \varnothing$, $\mathrm{Con}(A_1[\Delta_1]) = \bigvee_{i=2}^{n} \psi_i$, and for all $i \in \{2, \ldots, n\}$: $\psi_i \in \Delta_i$ and $\Delta_i \subseteq \Theta \cup \{\psi_i\}$. We have:

- $\mathrm{Con}(A[\Theta]) = \varphi$
- $\mathrm{Sub}(A[\Theta]) = \{A[\Theta]\} \cup \mathrm{Sub}(A_1[\Delta_1])$
- $\mathrm{HSub}(A[\Theta]) = \{A_2[\Delta_2], \ldots, A_n[\Delta_n]\}$

Let $T = \langle \mathcal{D}, \mathcal{K} \rangle$ consist of

$\mathcal{D} = \{p \Rightarrow q \vee r, q \Rightarrow s, s \Rightarrow v, r \Rightarrow u, u \Rightarrow v, t \Rightarrow \neg s\}$ and

$\mathcal{K} = \{p, t\}$.

Let $T = \langle \mathcal{D}, \mathcal{K} \rangle$ consist of
$\mathcal{D} = \{p \Rightarrow q \vee r, q \Rightarrow s, s \Rightarrow v, r \Rightarrow u, u \Rightarrow v, t \Rightarrow \neg s\}$ and
$\mathcal{K} = \{p, t\}$.

We have for instance the arguments:

- $A_1[\varnothing] = \langle \langle p \rangle \Rightarrow q \vee r \rangle$
- $A_2[q] = \langle [q] \Rightarrow s \Rightarrow v \rangle$
- $A_3[r] = \langle [r] \Rightarrow u \Rightarrow v \rangle$
- $A_4[\varnothing] = \langle A_1[\varnothing], A_2[q], A_3[r] \rightsquigarrow v \rangle$.

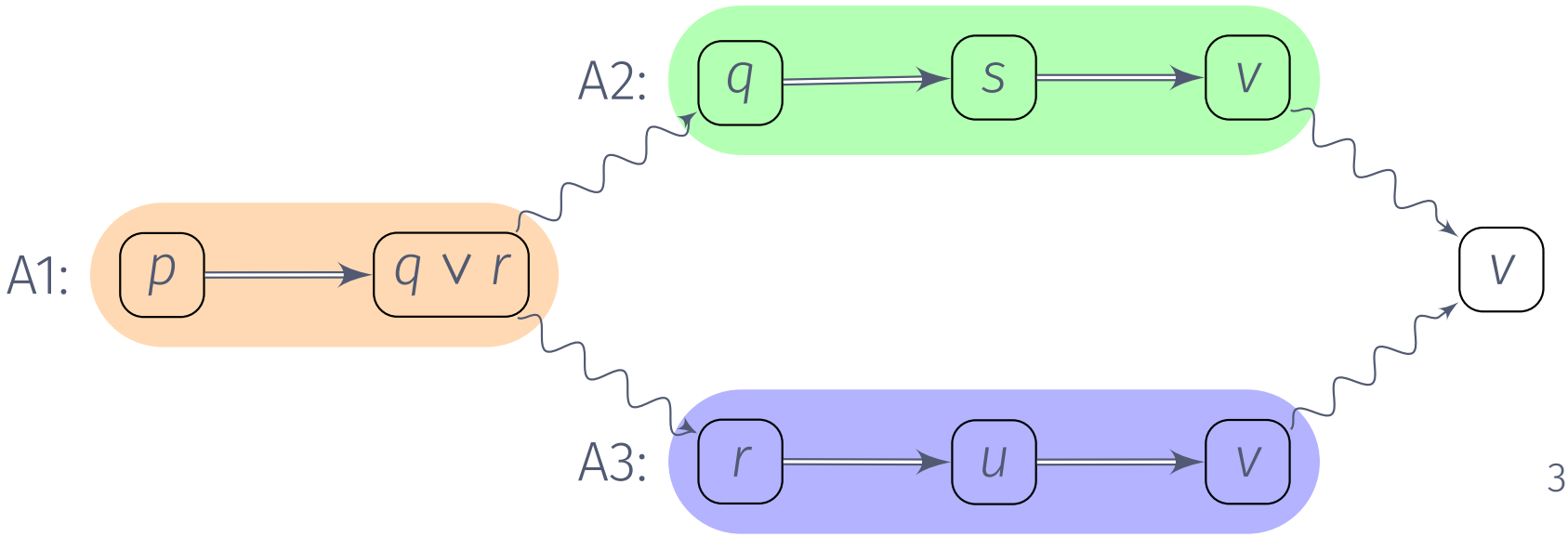

What about attacks?

- $A_1[\varnothing] = \langle\langle p\rangle \Rightarrow q \vee r\rangle$
- $A_2[q] = \langle[q] \Rightarrow s \Rightarrow v\rangle$
- $A_3[r] = \langle[r] \Rightarrow u \Rightarrow v\rangle$
- $A_4[\varnothing] = \langle A_1[\varnothing], A_2[q], A_3[r] \rightsquigarrow v\rangle$.

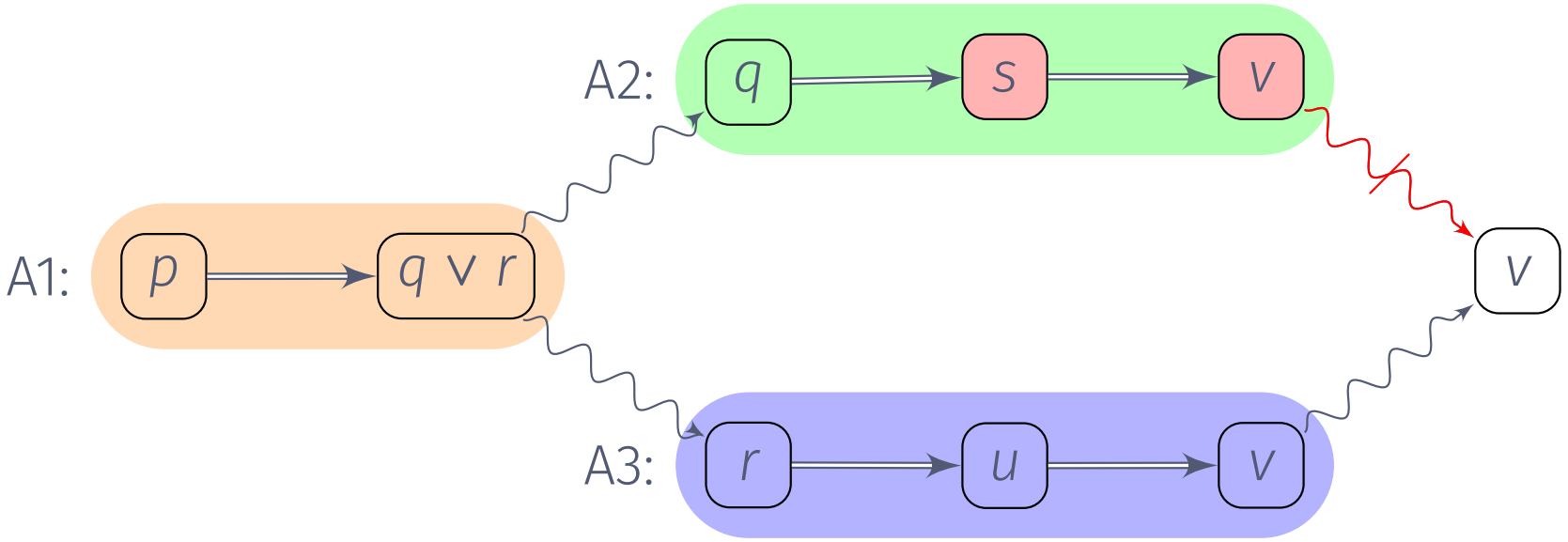

- $A_1[\varnothing] = \langle\langle p\rangle \Rightarrow q \vee r\rangle$
- $A_2[q] = \langle[q] \Rightarrow s \Rightarrow v\rangle$
- $A_3[r] = \langle[r] \Rightarrow u \Rightarrow v\rangle$
- $A_4[\varnothing] = \langle A_1[\varnothing], A_2[q], A_3[r] \rightsquigarrow v\rangle$.
- $A_5[t] = \langle[t] \Rightarrow \neg s\rangle$

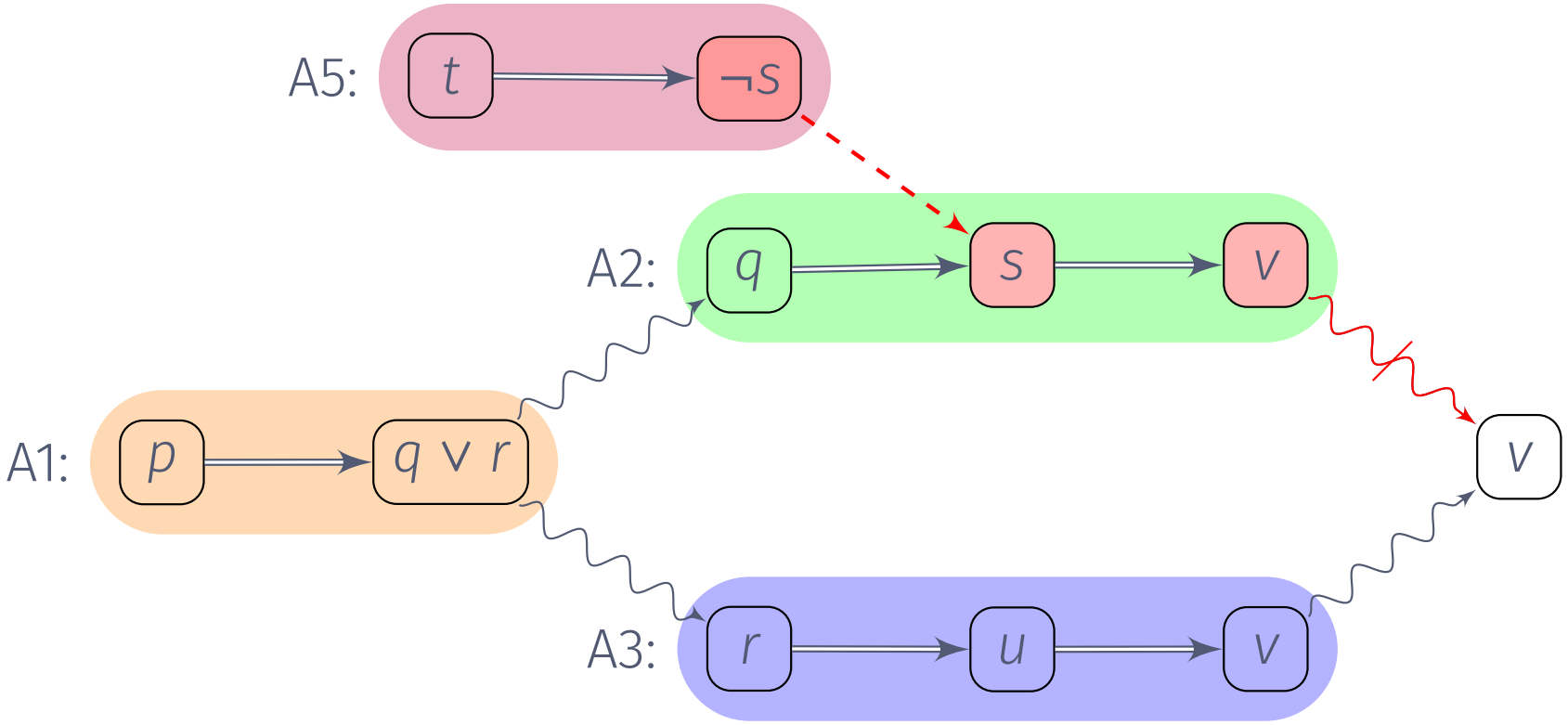

- $A_1[\varnothing] = \langle\langle p\rangle \Rightarrow q \vee r\rangle$
- $A_2[q] = \langle[q] \Rightarrow s \Rightarrow v\rangle$
- $A_3[r] = \langle[r] \Rightarrow u \Rightarrow v\rangle$
- $A_4[\varnothing] = \langle A_1[\varnothing], A_2[q], A_3[r] \rightsquigarrow v\rangle$.

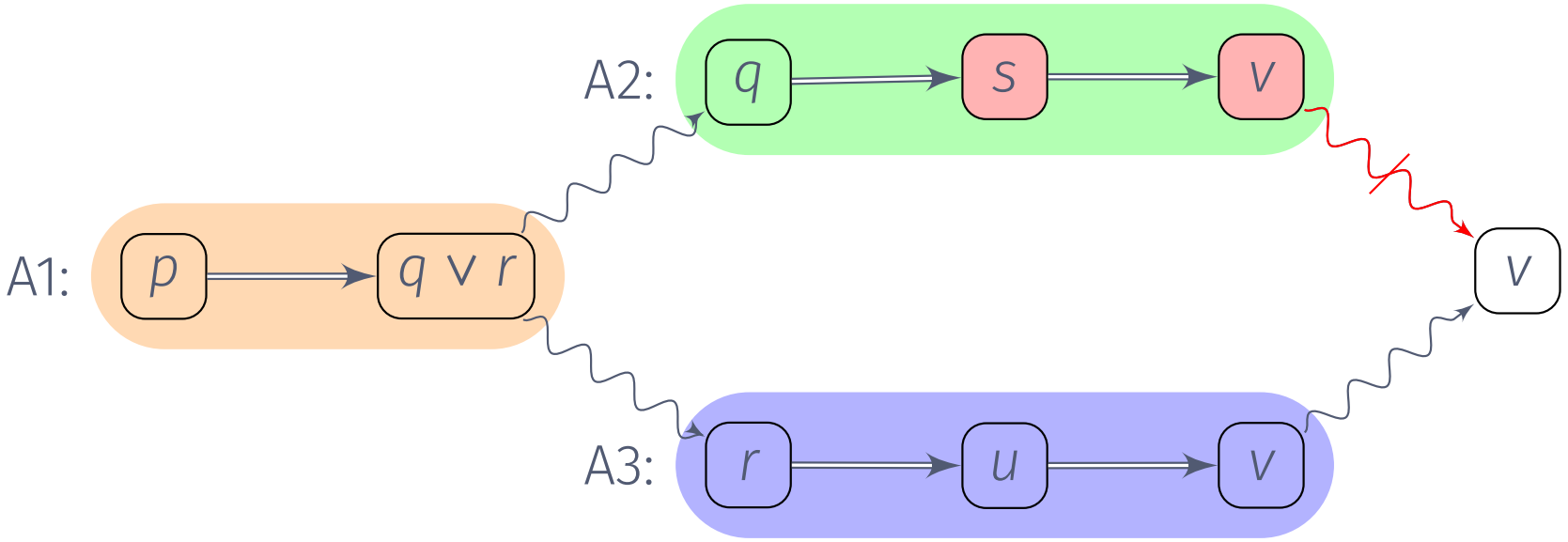

- $A_1[\varnothing] = \langle\langle p \rangle \Rightarrow q \vee r \rangle$
- $A_2[q] = \langle [q] \Rightarrow s \Rightarrow v \rangle$
- $A_3[r] = \langle [r] \Rightarrow u \Rightarrow v \rangle$
- $A_4[\varnothing] = \langle A_1[\varnothing], A_2[q], A_3[r] \rightsquigarrow v \rangle$.
- $A_6[q] = \langle \langle q \rangle \Rightarrow \neg s \rangle$

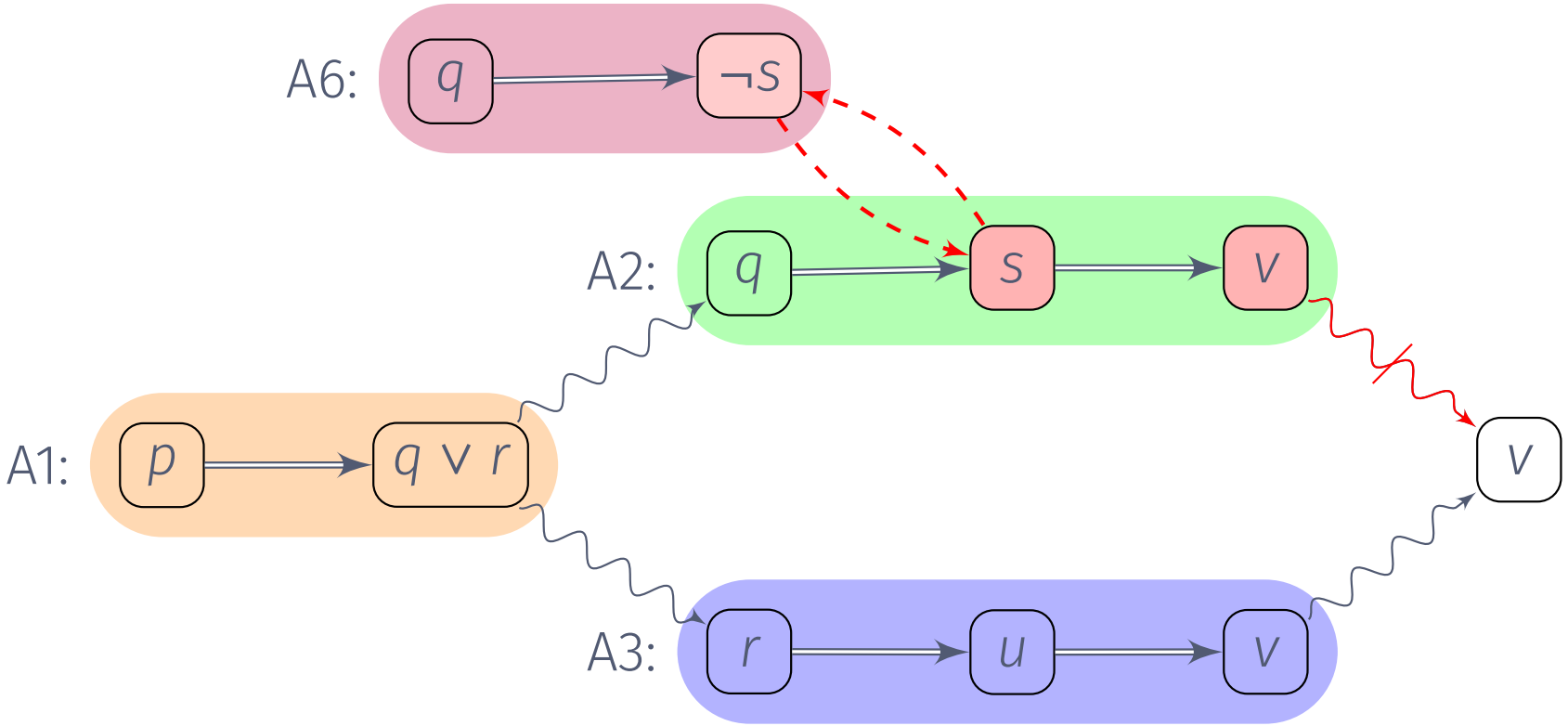

Attacks again (non-nested case)

Definition (Direct Rebut)

Where $A[\Theta], B[\Delta] \in \mathrm{Arg}(T)$, $A[\Theta]$ directly rebuts $B[\Delta]$ iff

- $\mathrm{Con}(A) = \neg\mathrm{Con}(B)$ or $\neg\mathrm{Con}(A) = \mathrm{Con}(B)$, and
- $\Delta \vdash \bigwedge \Theta$.

Definition (Rebut)

Where $A[\Theta], B[\Delta] \in \mathrm{Arg}(T)$, $A[\Theta]$ rebuts $B[\Delta]$ iff $A[\Delta]$ rebuts some $B'[\Theta] \in \mathrm{Sub}(B[\Theta])$.

Intermezzo: the other approach to rbc-defeat.

Other possible approaches

We could demand that an attacker shows that each hypothetical subargument is problematic. For instance,

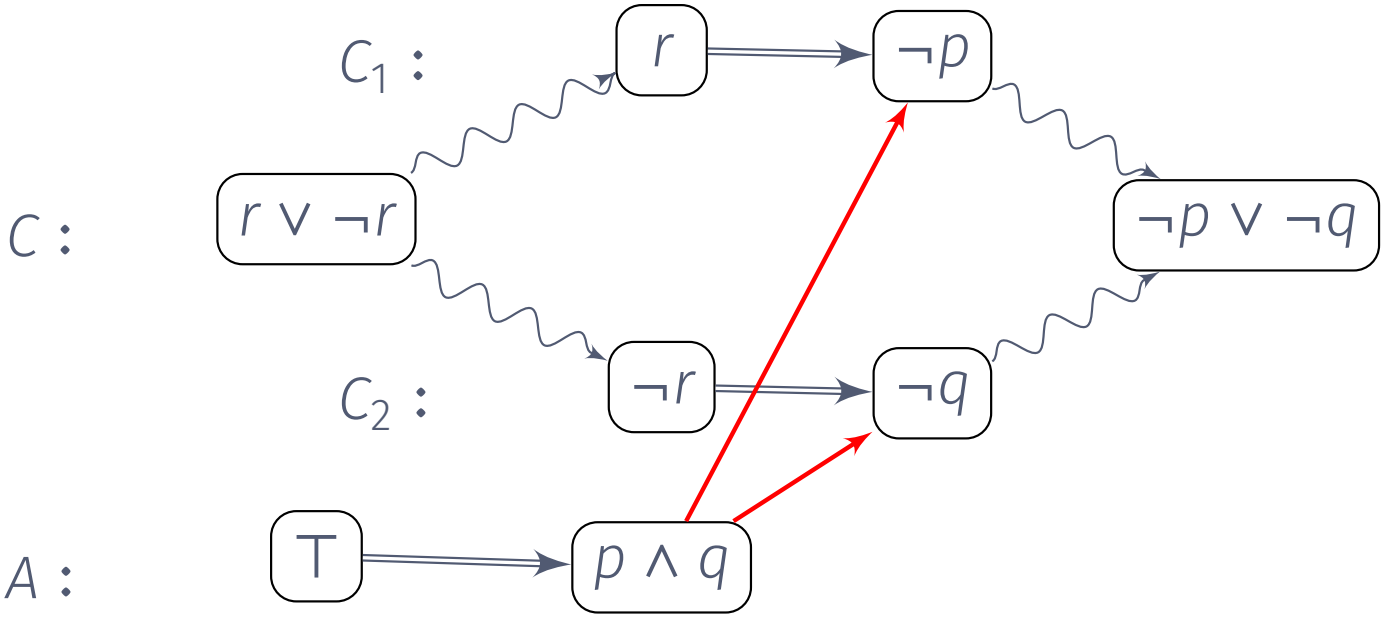

Other possible approaches

But, this leads to trouble. Suppose we have $\{\top \Rightarrow \neg s;\ \ \neg p \Rightarrow s\}$ then we can infer p. So we can contrapose defeasible conditionals. Here is how:

- $A = \top \Rightarrow \neg s$
- $B = p \vee \neg p, [p], [\neg p \Rightarrow s] \rightsquigarrow p \vee s$
- $C = A, B \rightarrow p$

Modus Tollens is often considered as not desirable for nonmonotonic conditionals. We'll go with the mainstream (a bit longer).

Contamination

Suppose $\mathcal{D} = \{\top \Rightarrow s\}$ and $\mathcal{F} = \varnothing$. Then under any semantics s is derivable.

Suppose we have $\mathcal{D}_2 = \mathcal{D} \cup \{\top \Rightarrow p;\ \ r \Rightarrow \neg p;\ \ \top \Rightarrow r\}$.

- $A = \top \Rightarrow s$
- $B = \top \Rightarrow p$
- $C = \top \Rightarrow r$
- $D = \langle C \to r \vee \neg s \rangle, [r] \Rightarrow \neg p, [\neg s] \rightsquigarrow \neg p \vee \neg s$
- $E = D, B \to \neg s$
- $F = A, B \to s \wedge p$

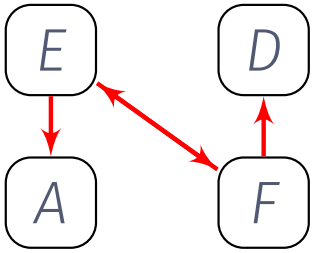

Problem: now s doesn't follow in most semantics.

Our approach is not without difficulties either:
a pragmatic oddity.

- If it's a working day she usually works. $wd \Rightarrow w$
- If it's a working day and there is a traffic jam, she is usually not in the library. $wd \wedge tj \Rightarrow \neg l$
- If she works but is not in the library she is usually in a cafe. $w \wedge \neg l \Rightarrow c$
- If she works in a cafe she usually types her thesis. $w \wedge c \Rightarrow t$
- If it's a working day and there is no traffic jam, she usually works in the library. $wd \wedge \neg tf \Rightarrow l$
- If she works in the library she usually reads. $l \Rightarrow r$
- She's not in the library. $\neg l$

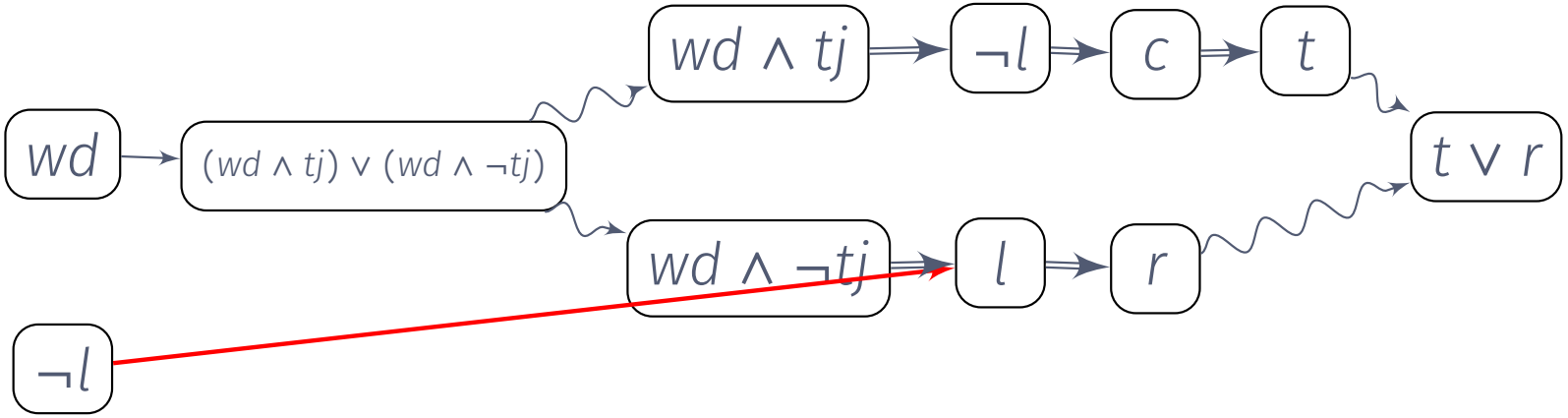

Generalizing Fact-attacks ...

Fact-attacks again

Definition

Where $A \in \mathrm{Arg}(T)$ we define $\dagger(A)$ as inductively follows:

- $\dagger(\langle \phi \rangle) = \phi$
- $\dagger(\langle A_1, \ldots, A_n \rightarrow \phi \rangle) = \dagger(A_1) \wedge \cdots \wedge \dagger(A_n)$
- $\dagger(\langle A_1, \ldots, A_n \Rightarrow \phi \rangle) = \dagger(A_1) \wedge \cdots \wedge \dagger(A_n) \wedge \phi$
- $\dagger(\langle A_1, [A_2], \ldots, [A_n] \rightsquigarrow \phi \rangle) = \dagger(A_1) \wedge (\dagger(A_2) \vee \cdots \vee \dagger(A_n))$

Definition

A strict argument $A \in \mathrm{Arg}(T)$ fact-attacks some argument $B \in \mathrm{Arg}(T)$ iff $\mathrm{Con}(A) = \neg\dagger(B)$.

Contamination again

Suppose $\mathcal{D} = \{\mathsf{T} \Longrightarrow s\}$ and $\mathcal{F} = \varnothing$. Then under any semantics s is derivable.

Contamination again

Suppose $\mathcal{D} = \{\top \Rightarrow s\}$ and $\mathcal{F} = \varnothing$. Then under any semantics s is derivable.

Suppose we have $\mathcal{D}_2 = \mathcal{D} \cup \{\top \Rightarrow p;\ \ r \Rightarrow \neg p;\ \ \top \Rightarrow r\}$.

Contamination again

Suppose $\mathcal{D} = \{\top \Rightarrow s\}$ and $\mathcal{F} = \varnothing$. Then under any semantics s is derivable.

Suppose we have $\mathcal{D}_2 = \mathcal{D} \cup \{\top \Rightarrow p;\ \ r \Rightarrow \neg p;\ \ \top \Rightarrow r\}$.

- $A = \top \Rightarrow s$
- $B = \top \Rightarrow p$
- $C = \top \Rightarrow r$
- $C' = C \Rightarrow \neg p$
- $D = \langle C \to r \vee \neg s \rangle, [r] \Rightarrow \neg p, [\neg s] \rightsquigarrow \neg p \vee \neg s$
- $E = D, B \to \neg s$

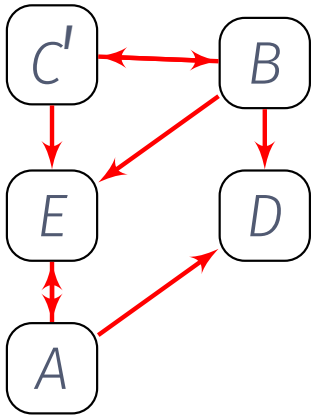

Problem: now s doesn't follow in grounded semantics.

h-paths: Illustration instead of a definition

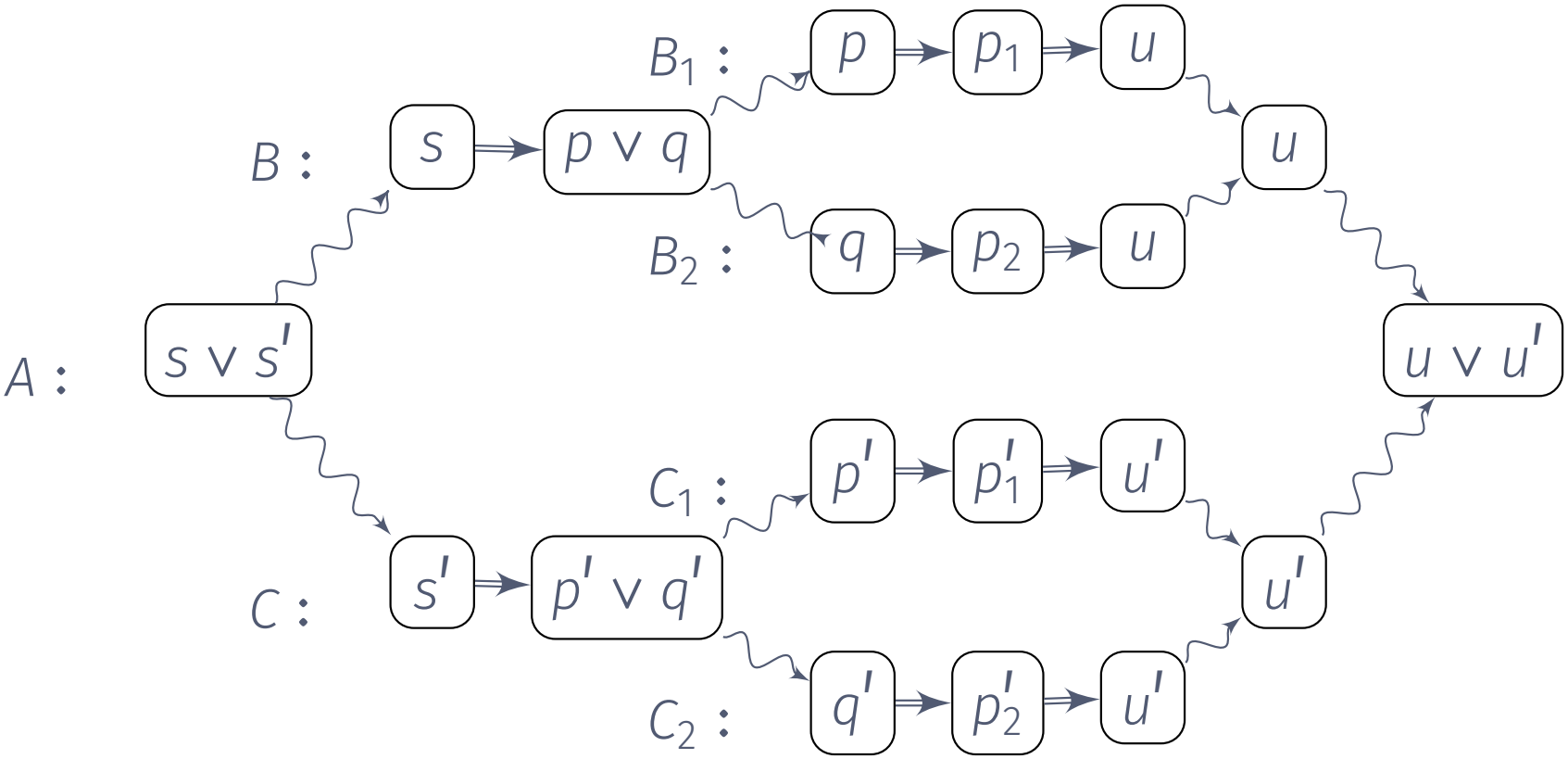

Idea A is consistent iff for each h-path $(\delta_1, \ldots, \delta_n)$ of A, $\bigwedge_{i=1}^{n} \delta_i \wedge \dagger A \nvdash \bot$.

h-paths: Illustration instead of a definition

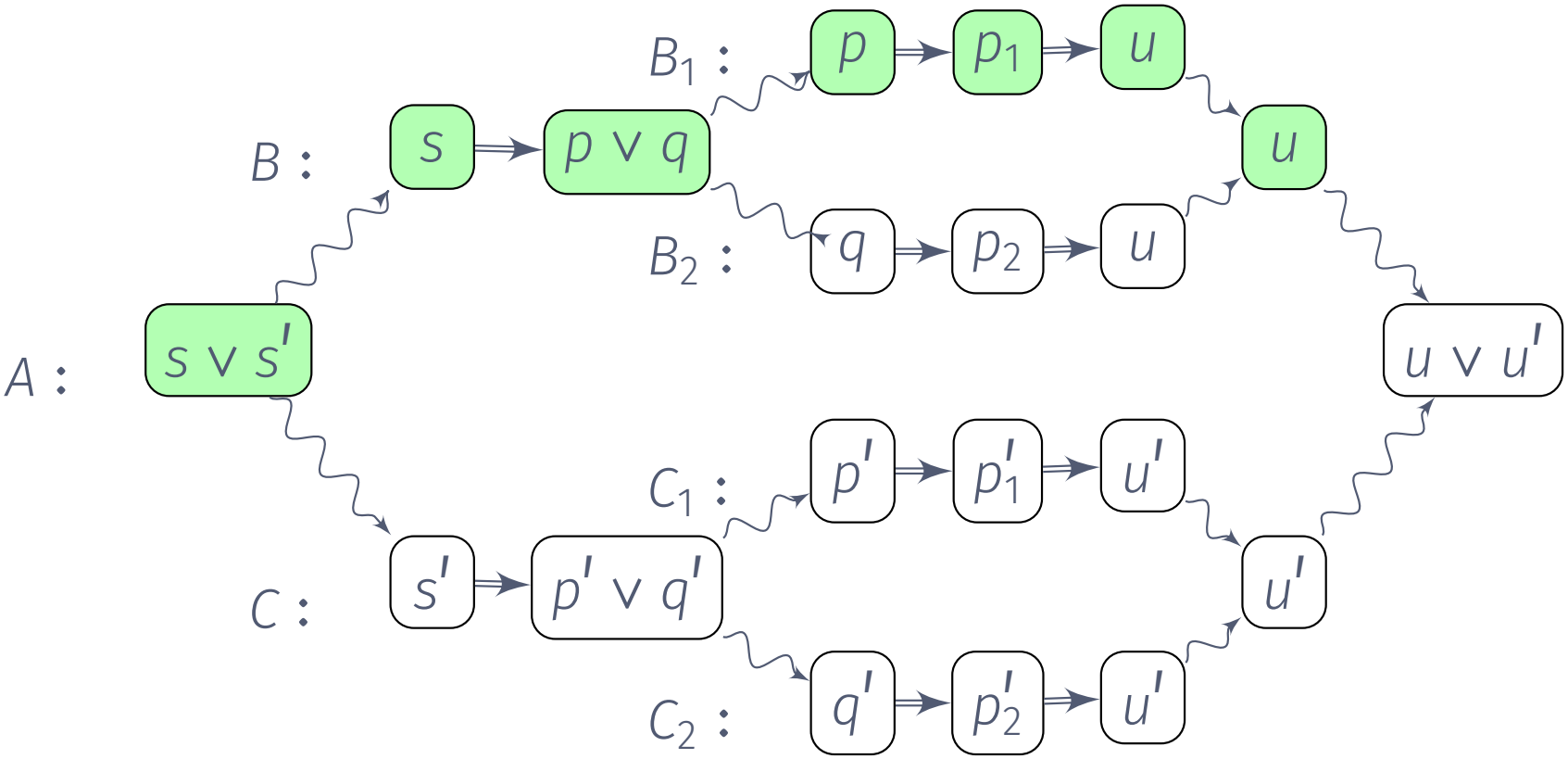

Idea A is consistent iff for each h-path $(\delta_1, \ldots, \delta_n)$ of A, $\bigwedge_{i=1}^{n} \delta_i \wedge \dagger A \nvdash \bot$.

h-paths: Illustration instead of a definition

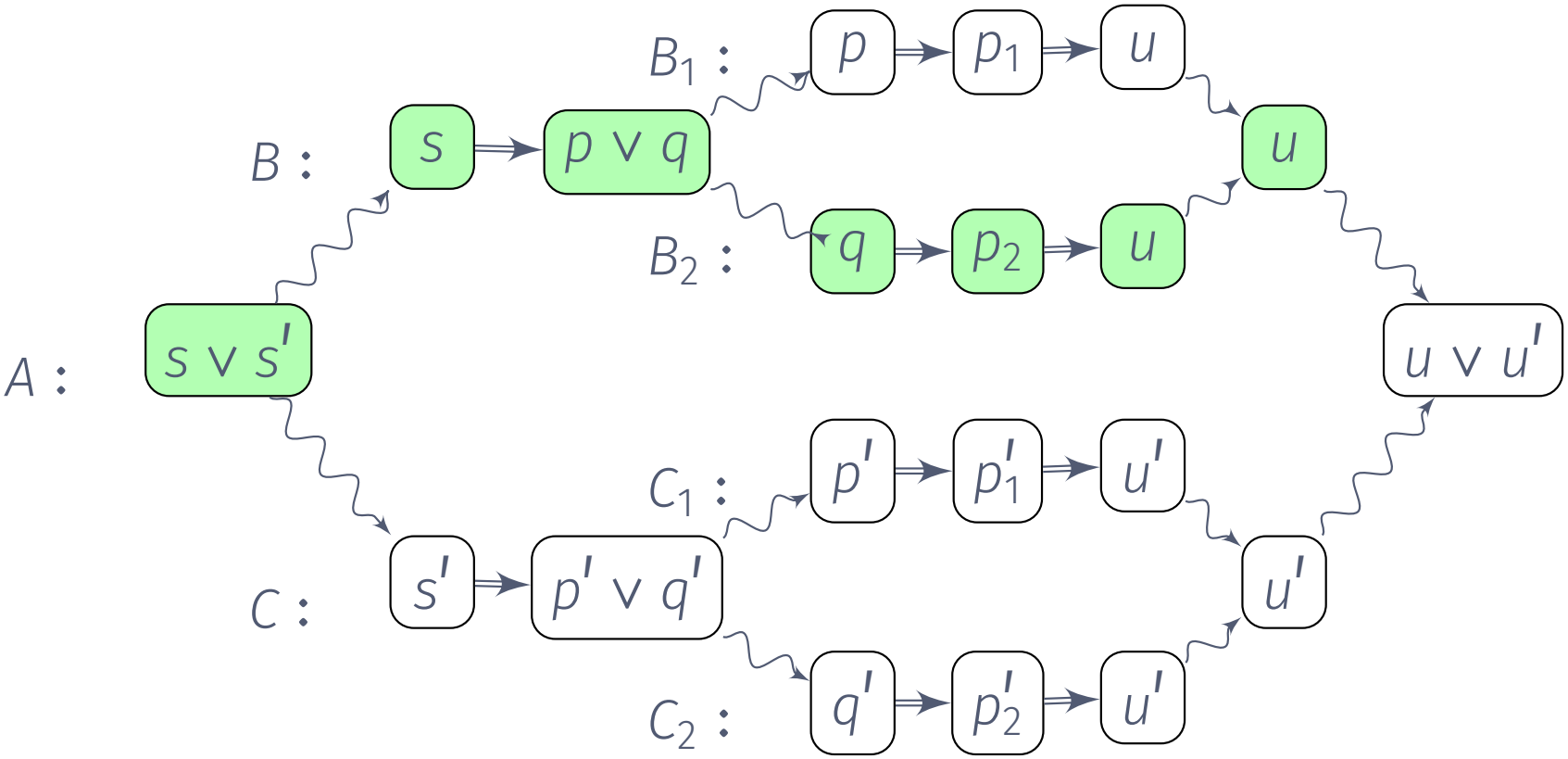

Idea A is consistent iff for each h-path $(\delta_1, \ldots, \delta_n)$ of A, $\bigwedge_{i=1}^{n} \delta_i \wedge \dagger A \nvdash \bot$.

h-paths: Illustration instead of a definition

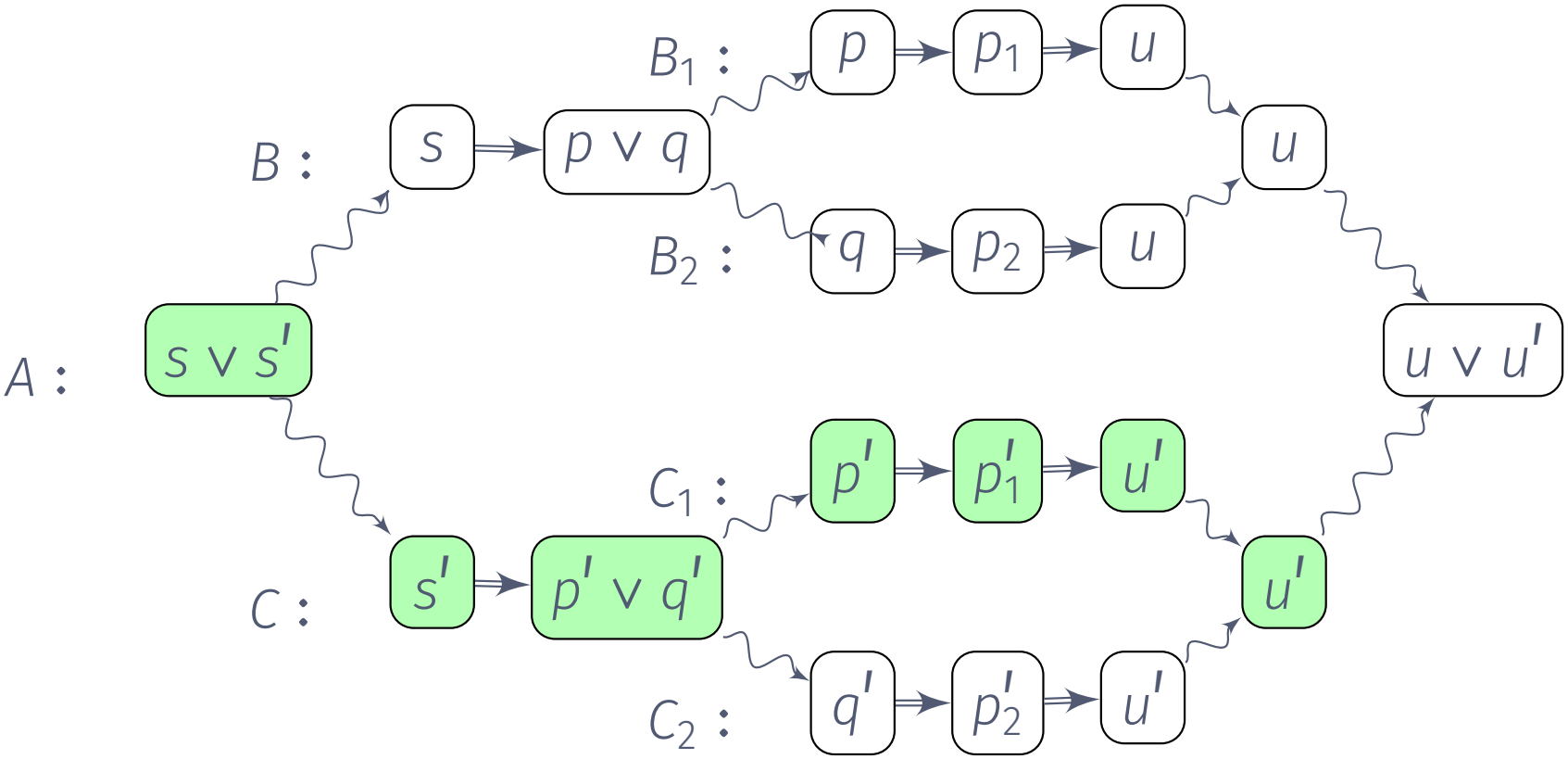

Idea A is consistent iff for each h-path $(\delta_1, \ldots, \delta_n)$ of A, $\bigwedge_{i=1}^{n} \delta_i \wedge \dagger A \nvdash \bot$.

h-paths: Illustration instead of a definition

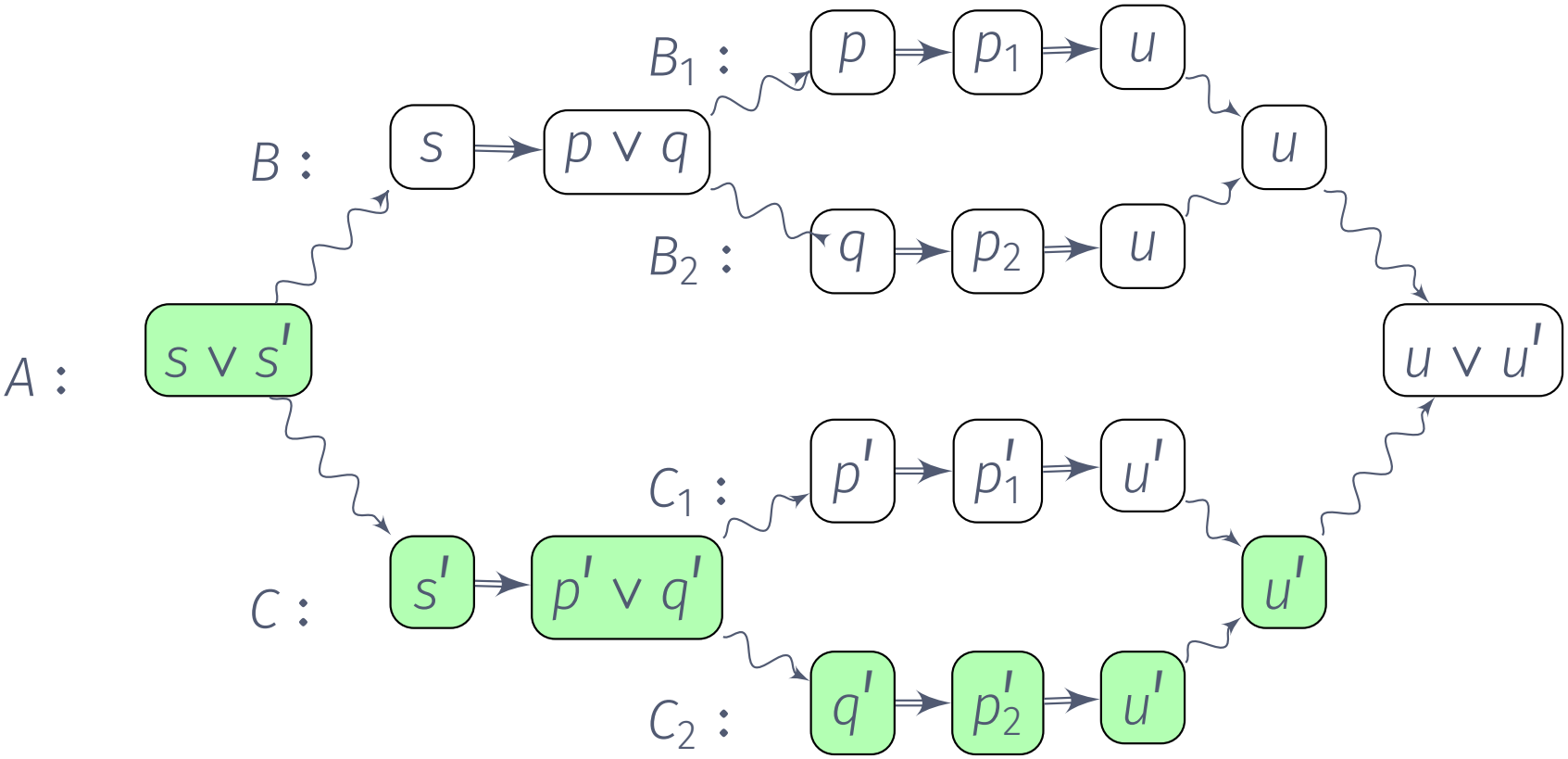

Idea A is consistent iff for each h-path $(\delta_1, \ldots, \delta_n)$ of A, $\bigwedge_{i=1}^{n} \delta_i \wedge \dagger A \nvdash \bot$.

How does this help with the example?

- $A = \top \Rightarrow s$
- $B = \top \Rightarrow p$
- $C = \top \Rightarrow r$
- $C' = C \Rightarrow \neg p$
- $D = \langle C \to r \vee \neg s \rangle, [r] \Rightarrow \neg p, [\neg s] \rightsquigarrow \neg p \vee \neg s$
- $E = D, B \to \neg s$

Note that $\dagger(E) = r \wedge ((r \wedge \neg p) \vee \neg s) \wedge p$.

One h-path is via $[r] \Rightarrow \neg p$.

Consequences

We define a consequence relation on basis of $AT = \langle \mathrm{Arg}(T), \mathrm{Attacks}(T) \rangle$ as before on the basis of the grounded arguments:

$$AT \mid\!\sim \phi \text{ iff there is a grounded argument } A[\varnothing] \in \mathrm{Arg}(T) \text{ for which } \mathrm{Con}(A) = \phi.$$

Back to the Broken Hand Example

Let T be such that $\mathcal{D} = \{\mathsf{wl} \Rightarrow \neg\mathsf{rhb}\}$ and $\mathcal{K} = \{\mathsf{wl}, \mathsf{lhb} \vee \mathsf{rhb}\}$.

We have the following arguments:

- $a_1 = \langle \mathsf{lhb} \vee \mathsf{rhb} \rangle$
- $a_2 = \langle \langle \mathsf{wl} \rangle \Rightarrow \neg\mathsf{rhb} \rangle$
- $a_3 = \langle a_1, a_2 \rightarrow \mathsf{lhb} \rangle$.

So lhb is derivable, as expected.

Complications

Closure

No Closure

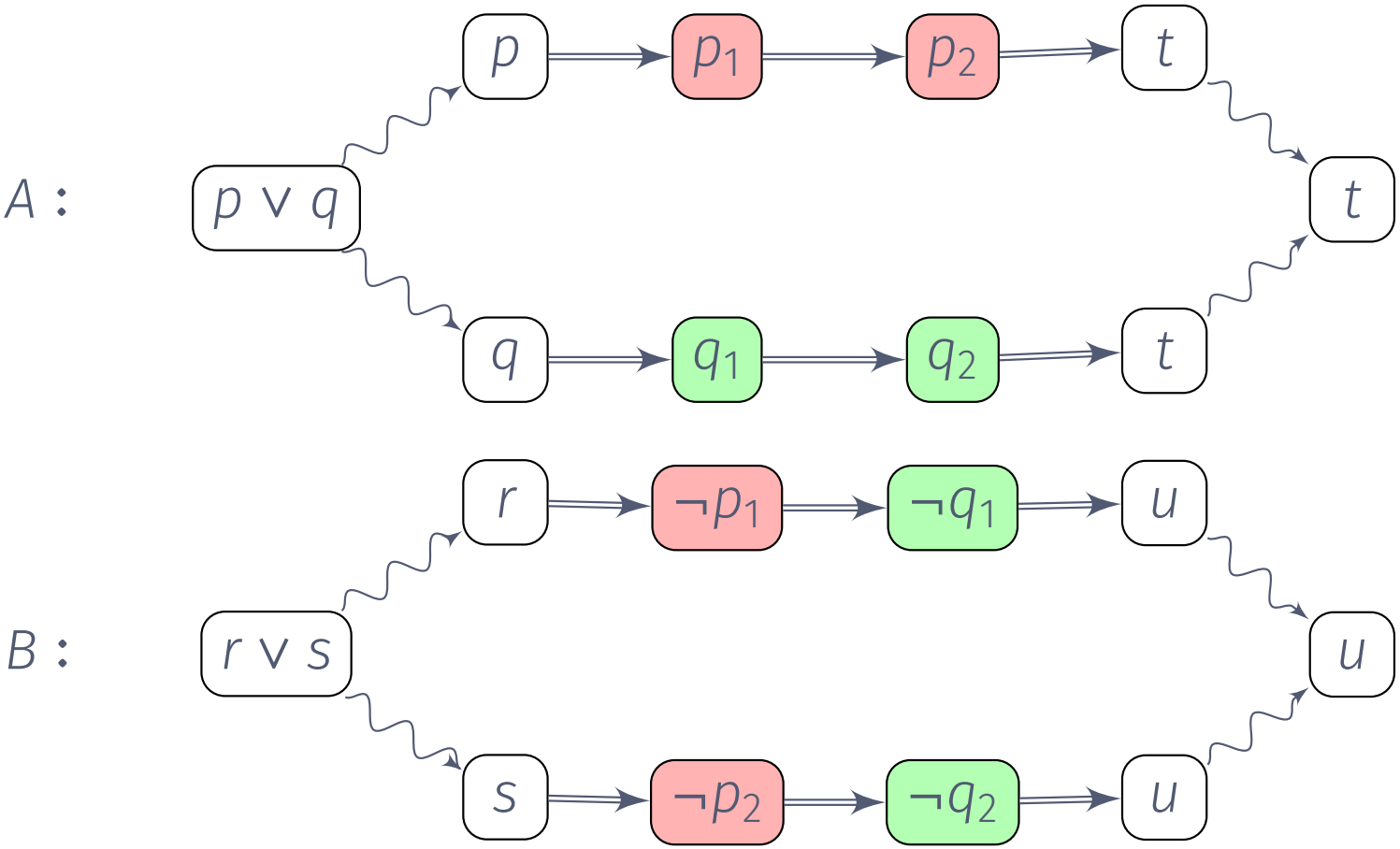

Problem: $C = \langle A, B \to t \wedge u \rangle$ is fact-attacked while A and B are grounded. Therefore: no closure!

Underdetermined attacks

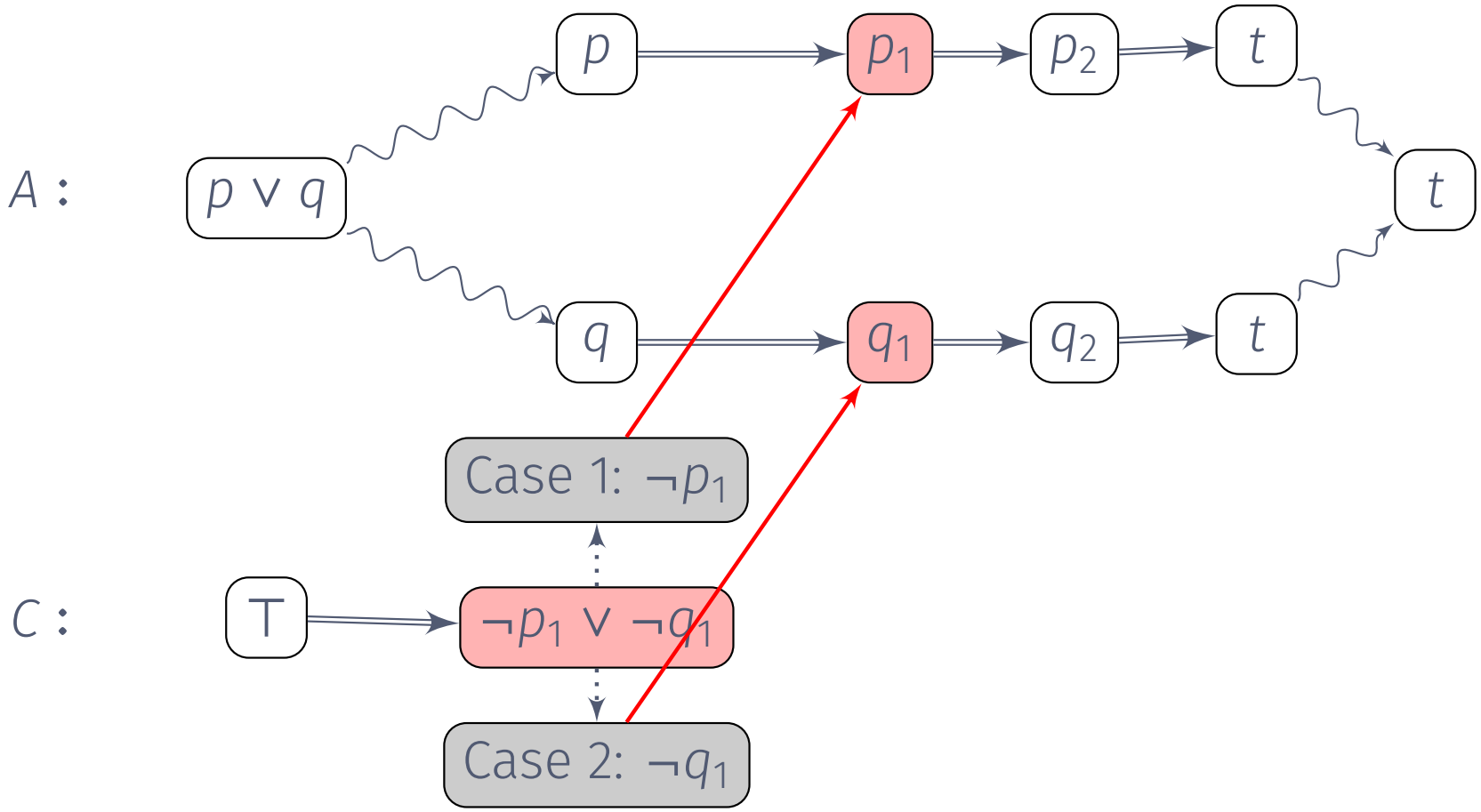

Problem: It seems that A and C form an inconsistent stance.

Idea: Generalize rebuts to disjunctive rebuts

Solution: Disjunctive Attacks

Definition

An rbc-tree in B is a labeled rooted tree where each label is either an rbc-argument or a non-rbc non-strict argument.

- The root of τ is B.
- Each non-rbc node A is either a leaf or it has an rbc-node $C \in \mathbf{Sub}(A)$ as only child.
- For each rbc-node $\langle A_0, A_1, \ldots, A_n \rightsquigarrow \phi \rangle$ and each $1 \leq i \leq n$ there is maximal one child node A_i.

Solution: Disjunctive Attacks

Definition

An rbc-tree in B is a labeled rooted tree where each label is either an rbc-argument or a non-rbc non-strict argument.

- The root of τ is B.
- Each non-rbc node A is either a leaf or it has an rbc-node $C \in \mathsf{Sub}(A)$ as only child.
- For each rbc-node $\langle A_0, A_1, \ldots, A_n \rightsquigarrow \phi \rangle$ and each $1 \leq i \leq n$ there is maximal one child node A_i.

Definition

$A[\Delta]$ disjunctively rebuts $B[\Delta']$ if $\mathsf{Con}(A[\Delta]) = \bigvee \overline{\phi_i}$ and there is an rbc-tree in B with leaves $B_1, \ldots, B_n$ such that for each $1 \leq i \leq n$ there is a $B' = \langle \ldots \Rightarrow \phi_i \rangle \in \mathsf{Sub}(B_i)$ and $\Delta' \vdash_{\mathcal{F}} \bigwedge \Delta$.

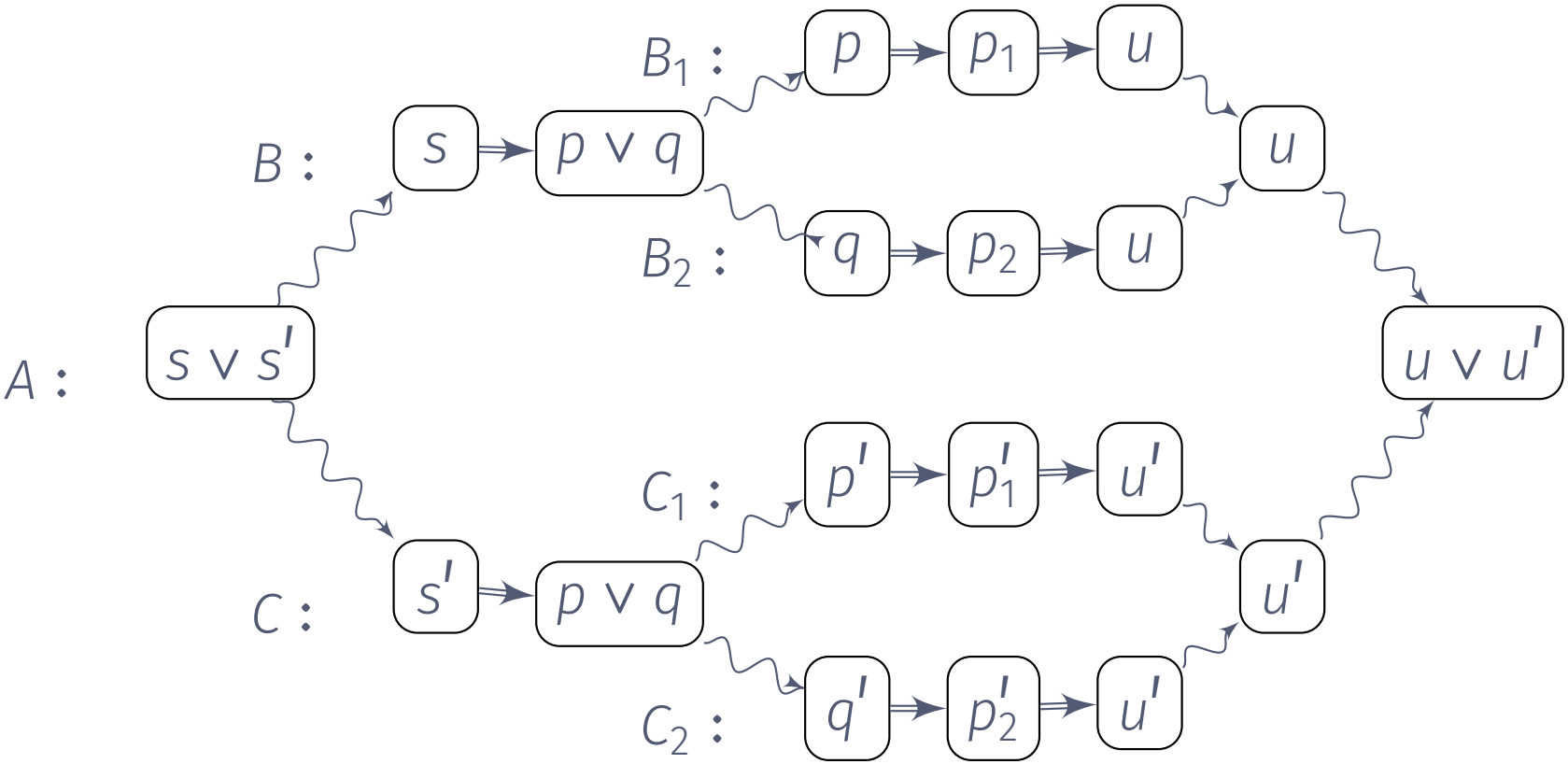

Some rbc-trees of A:

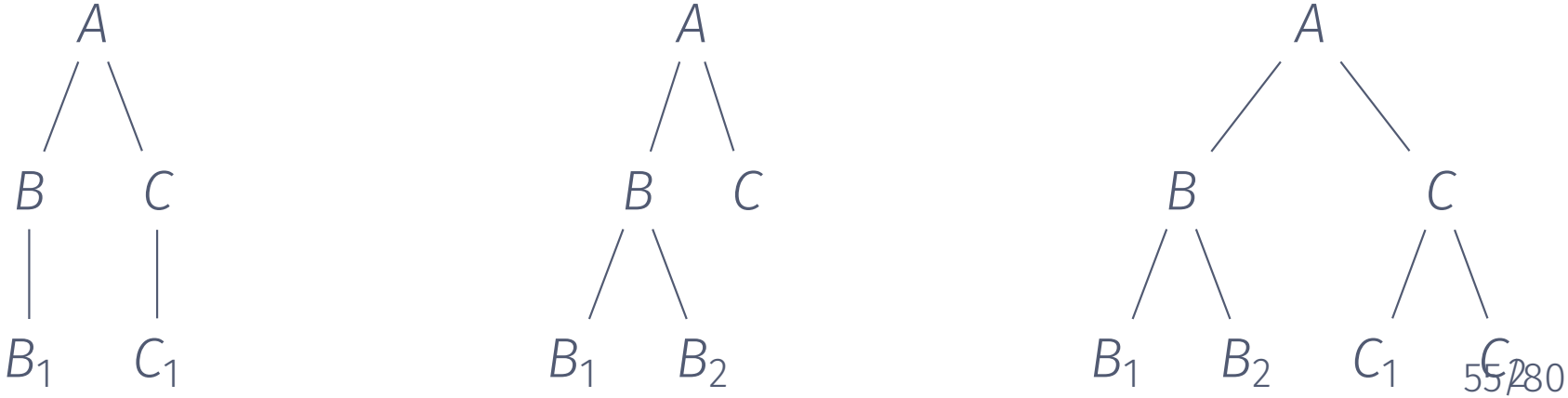

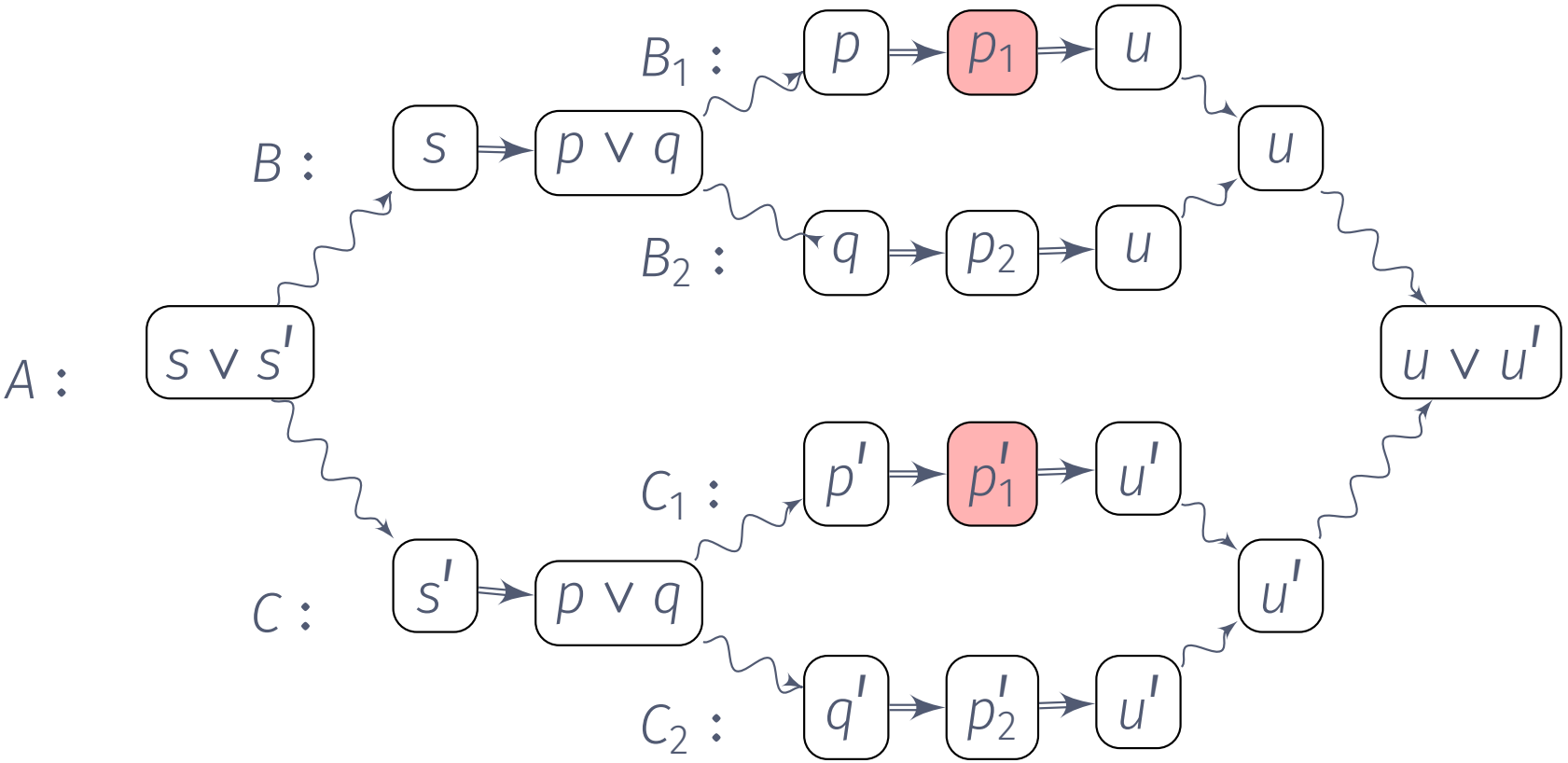

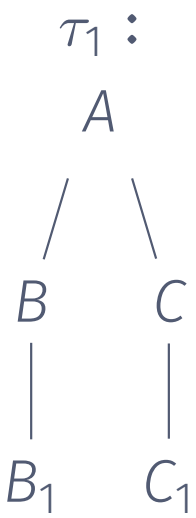

$D[\varnothing] = \langle \cdots \Rightarrow \neg p_1 \vee \neg p'_1 \rangle$ disjunctively rebuts $A[\varnothing]$ relative to τ_1.

Back to Underdetermined Attacks

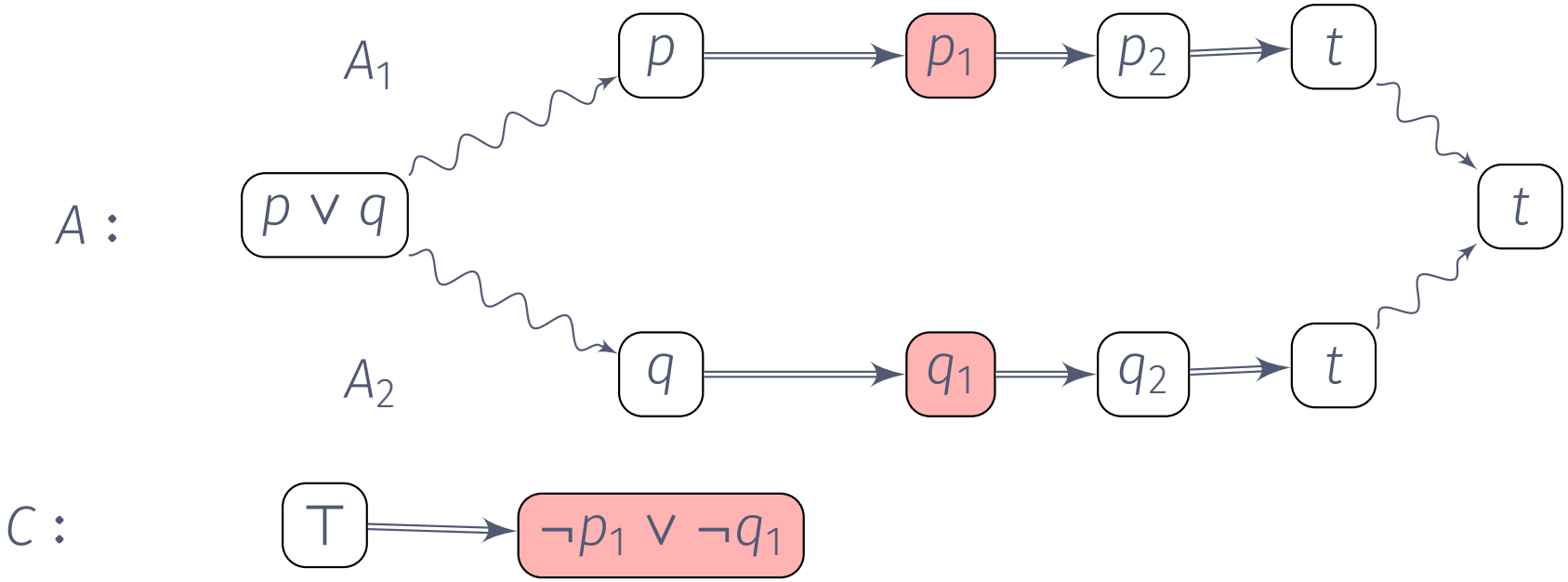

Now: C disjunctively attacks A relative to $\begin{array}{c} A \\ / \quad \backslash \\ A_1 \quad A_2 \end{array}$.

Back to No Closure

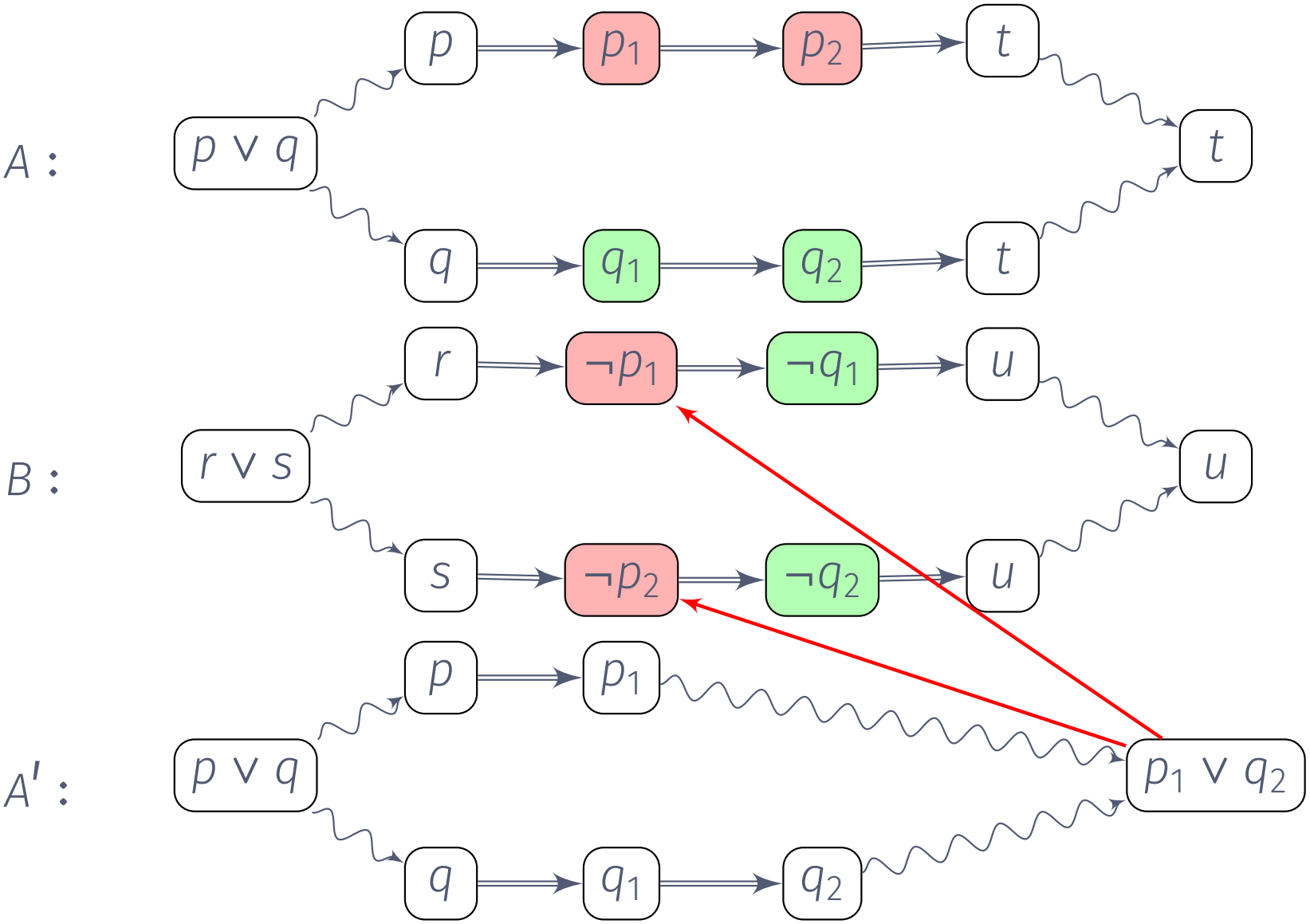

… but …

Do Hypotheses have a special attack status?

What if not?

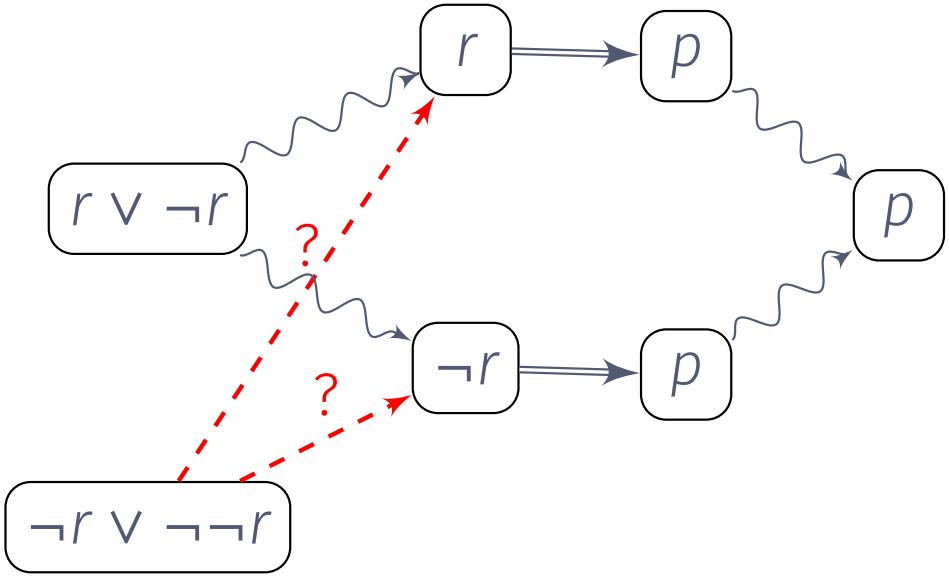

… but (cont.) …

Back to the pragmatic oddity

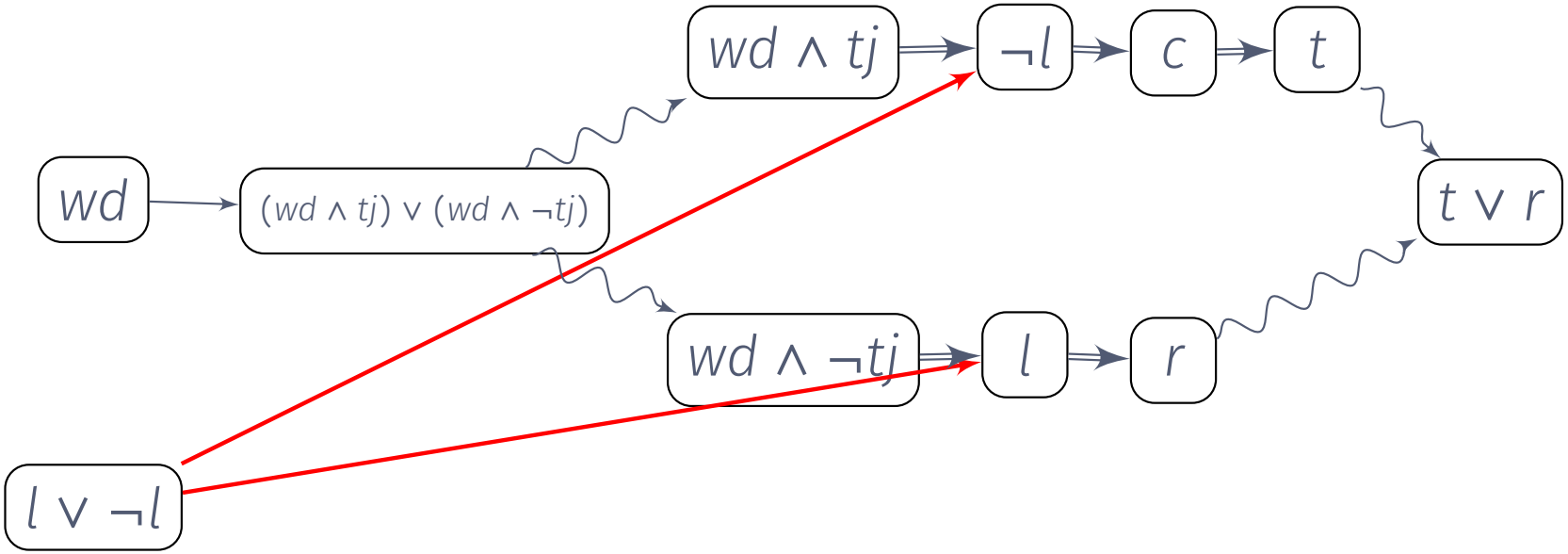

An Impasse?

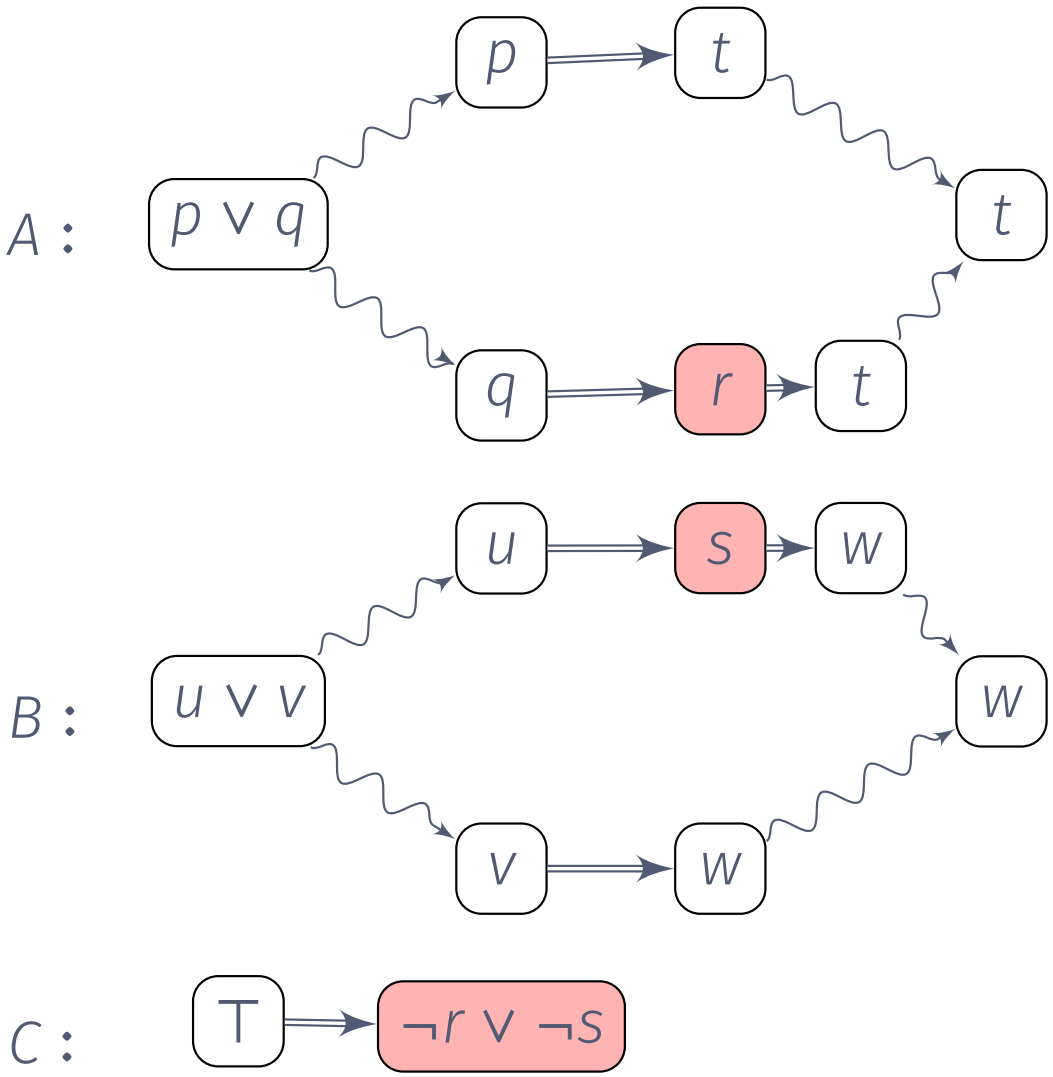

Problem: C does not disjunctively rebut $D = \langle A, B \to t \wedge w \rangle$ according to our definition.

Note: rbc-trees for D are of the form:

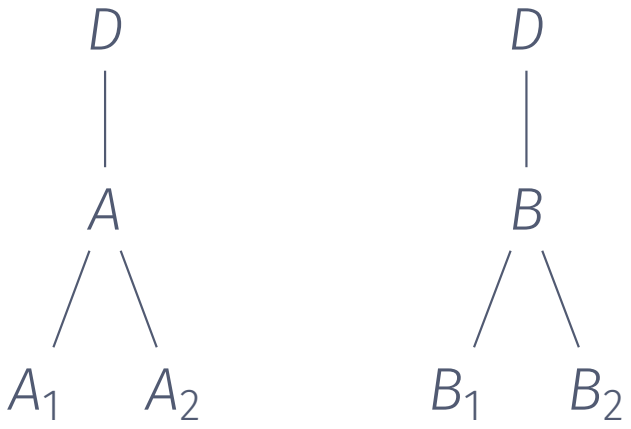

Other Approach: Generalized Rebut relative to h-paths

Idea: A attacks B iff there is an h-path $(\delta_1, \ldots, \delta_n)$ in B such that $\mathsf{Con}(A) = \neg \bigwedge \Theta$ where $\Theta \subseteq \{\delta_1, \ldots, \delta_n\}$.

Other Approach: Generalized Rebut relative to h-paths

Definition

Where $A[\Delta]$ and $B[\Theta]$ are arguments in $\mathtt{Arg}(AT)$, $A[\Delta]$ attacks $B[\Theta]$ in $\langle \mathcal{A}_1, \ldots, \mathcal{A}_n \rangle$ iff there is an h-path $\langle H_1[\Pi_1], \ldots, H_n[\Pi_n] \rangle$ in $B[\Theta]$ such that each of the following conditions is fulfilled:

1. for each $1 \leq i \leq n$, $\mathcal{A}_i \subseteq \mathsf{Sub}(H_i[\Pi_i])$,
2. $\mathsf{Conc}(A[\Delta]) = \neg \bigwedge \bigcup_{i=1}^{n} \mathsf{Concs}(\mathcal{A}_i)$,
3. $\mathcal{A}_n \neq \varnothing$,
4. at least one $H_i[\Pi_i]$ is defeasible, and
5. $\Pi_i \vdash_{\mathcal{F}} \Delta$ where i is minimal such that $\mathcal{A}_i \neq \varnothing$ (where $\mathcal{F}$ is the set of the given facts).

Other Approach: Generalized Rebut relative to h-paths

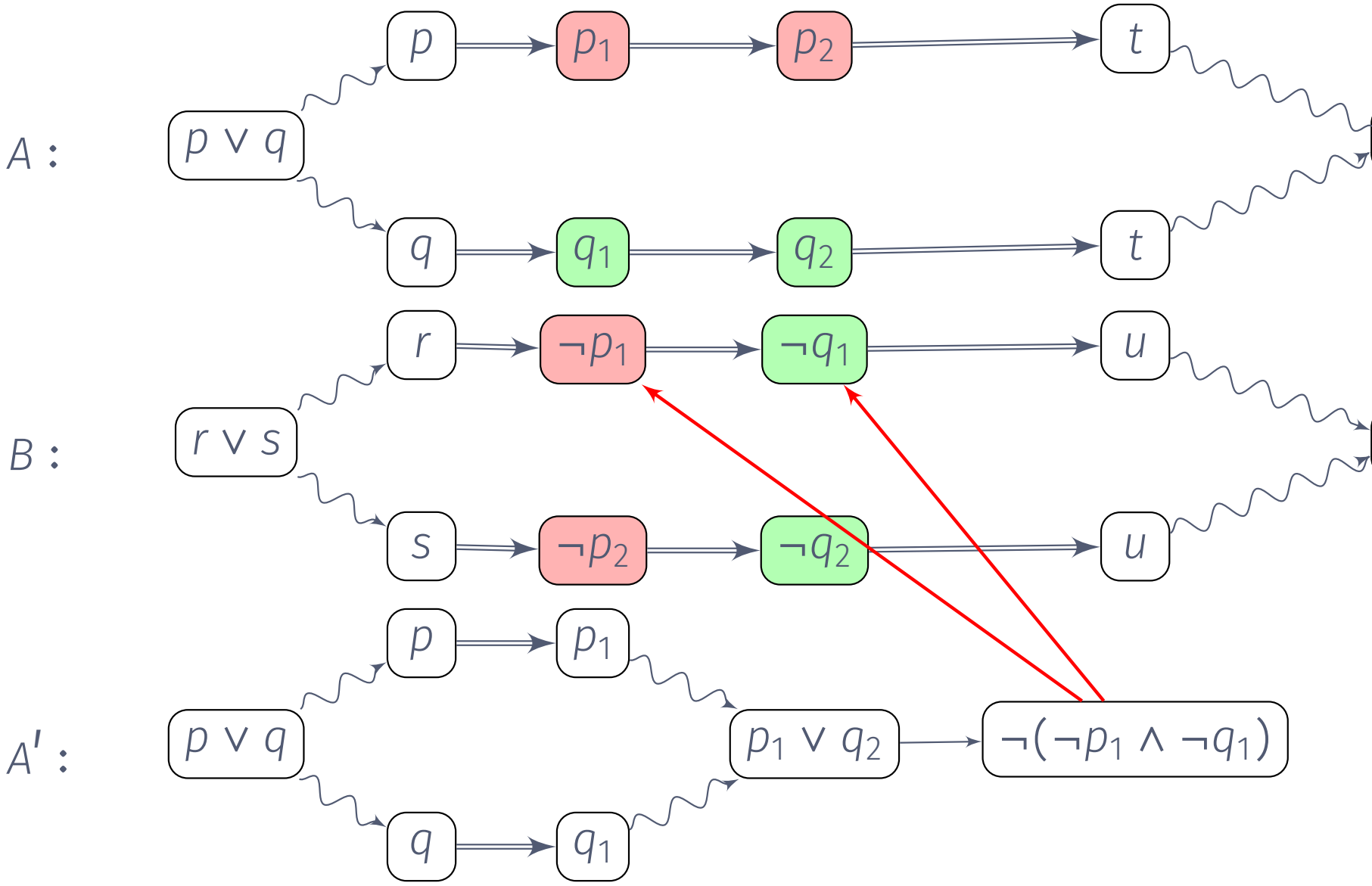

… but … hypothetical closure …

$$\mathcal{D} = \{s \Rightarrow p;\ s \Rightarrow q;\ r \Rightarrow \neg p;\ \neg r \Rightarrow \neg q\}$$

and the empty set of facts $\mathcal{F} = \varnothing$. Some arguments:

- $A[s] = [s] \Rightarrow p$
- $B[s] = [s] \Rightarrow q$
- $C_1[r] = [r] \Rightarrow \neg p$
- $C_2[\neg r] = [\neg r] \Rightarrow \neg q$
- $C[\varnothing] = \langle \rightarrow r \vee \neg r \rangle, C_1, C_2 \rightsquigarrow \neg p \vee \neg q \rightarrow \neg(p \wedge q)$
- $(A \oplus B)[\varnothing] = A, B \rightarrow p \wedge q$

We have the following attacks:

- $(A \oplus B)[s]$ is attacked by $C[\varnothing]$ (with unrestricted generalized rebut);
- $(A \oplus C)[s]$ and $(B \oplus C)[s]$ are inconsistent and thus filtered out.

This means that we get $A[s]$ and $B[s]$ being grounded, while $(A \oplus B)[s]$ is not grounded.

Trouble with OR for the consequence relation:

If $\langle \mathcal{S}, \mathcal{D}, \mathcal{K} \cup \{\phi_1\} \rangle \mid\!\sim \psi$ and $\langle \mathcal{S}, \mathcal{D}, \mathcal{K} \cup \{\phi_2\} \rangle \mid\!\sim \psi$,
then $\langle \mathcal{S}, \mathcal{D}, \mathcal{K} \cup \{\phi_1 \vee \phi_2\} \rangle \mid\!\sim \psi$.

OR for the Consequence Relation

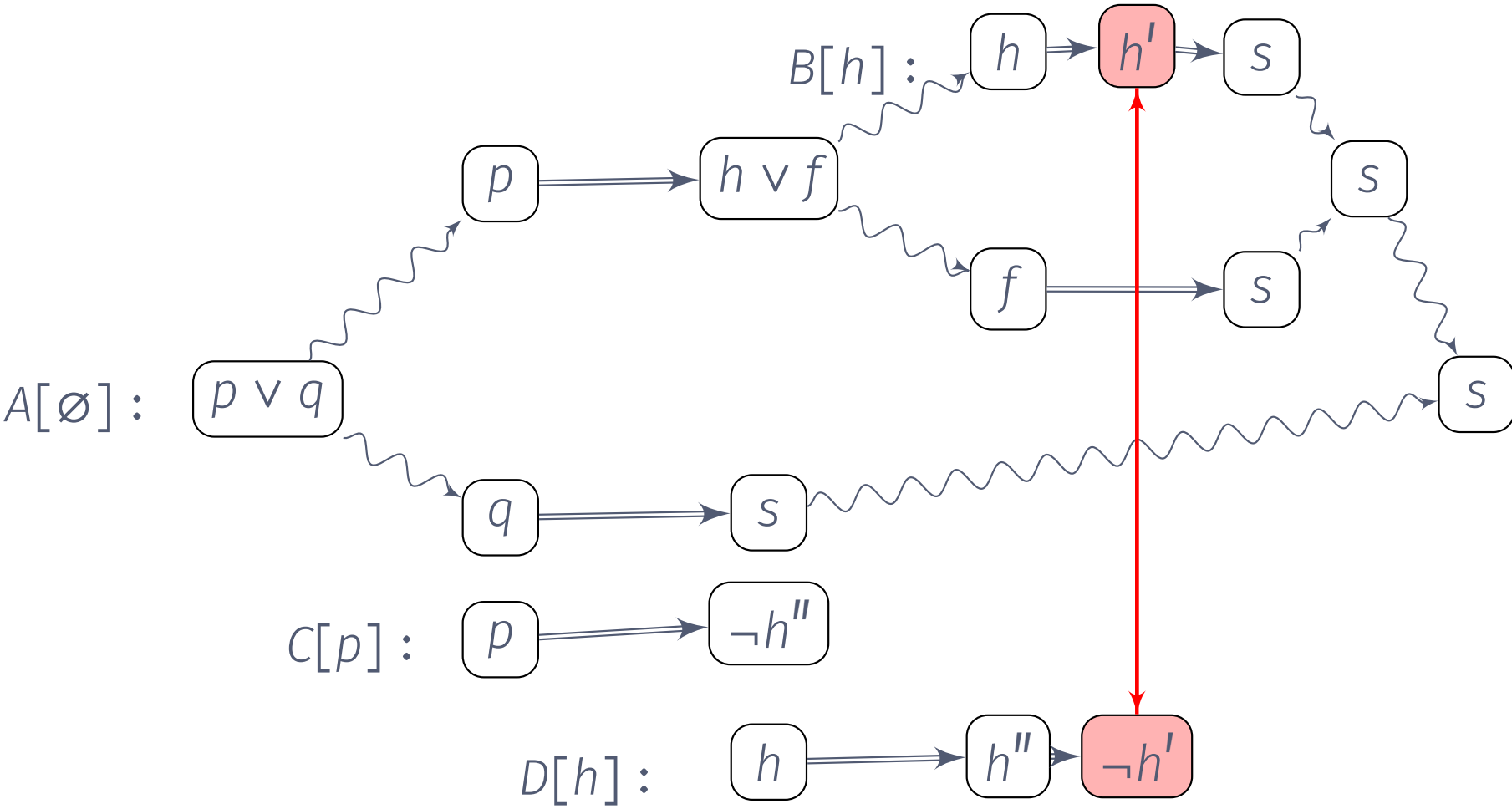

So: $p \vee q \not\vdash s$.

OR for the Consequence Relation (cont.)

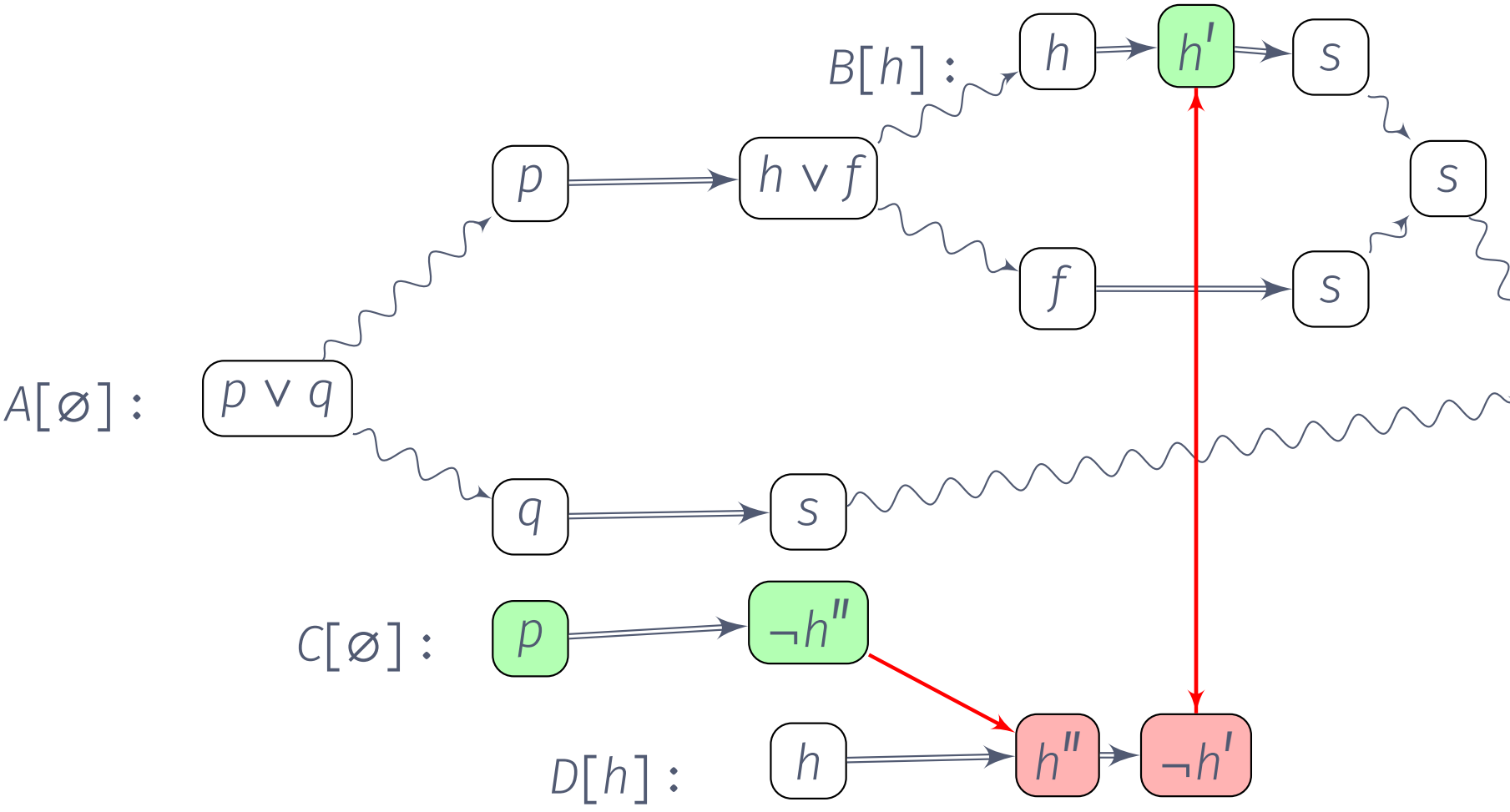

So: $p \mid\!\sim s$.

OR for the Consequence Relation (cont.)

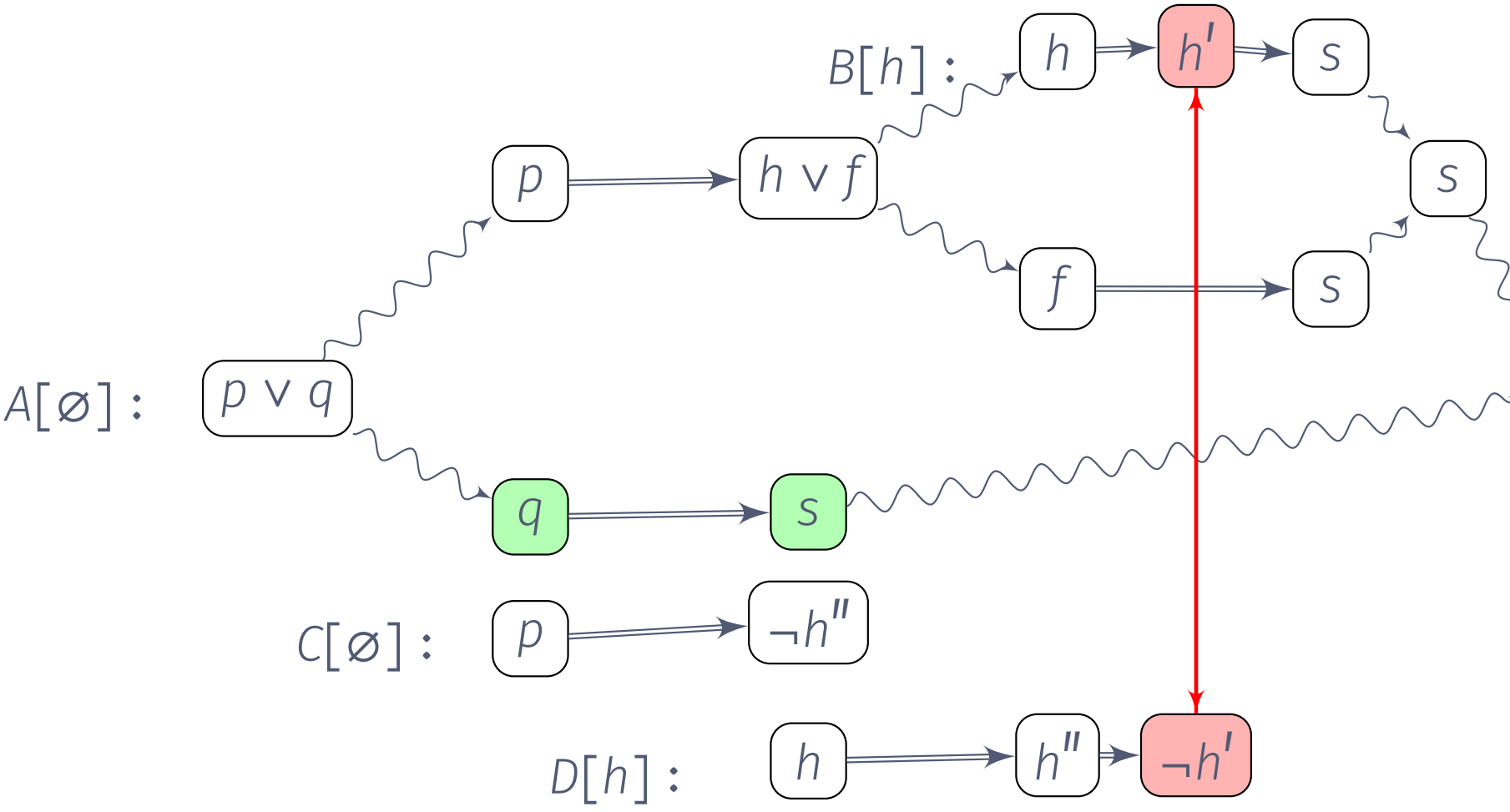

So: $q \mid\!\sim s$.

Solution

Idea: all treat last hypotheses used in the originally attacked argument as the weakest in an attack-defense sequence.

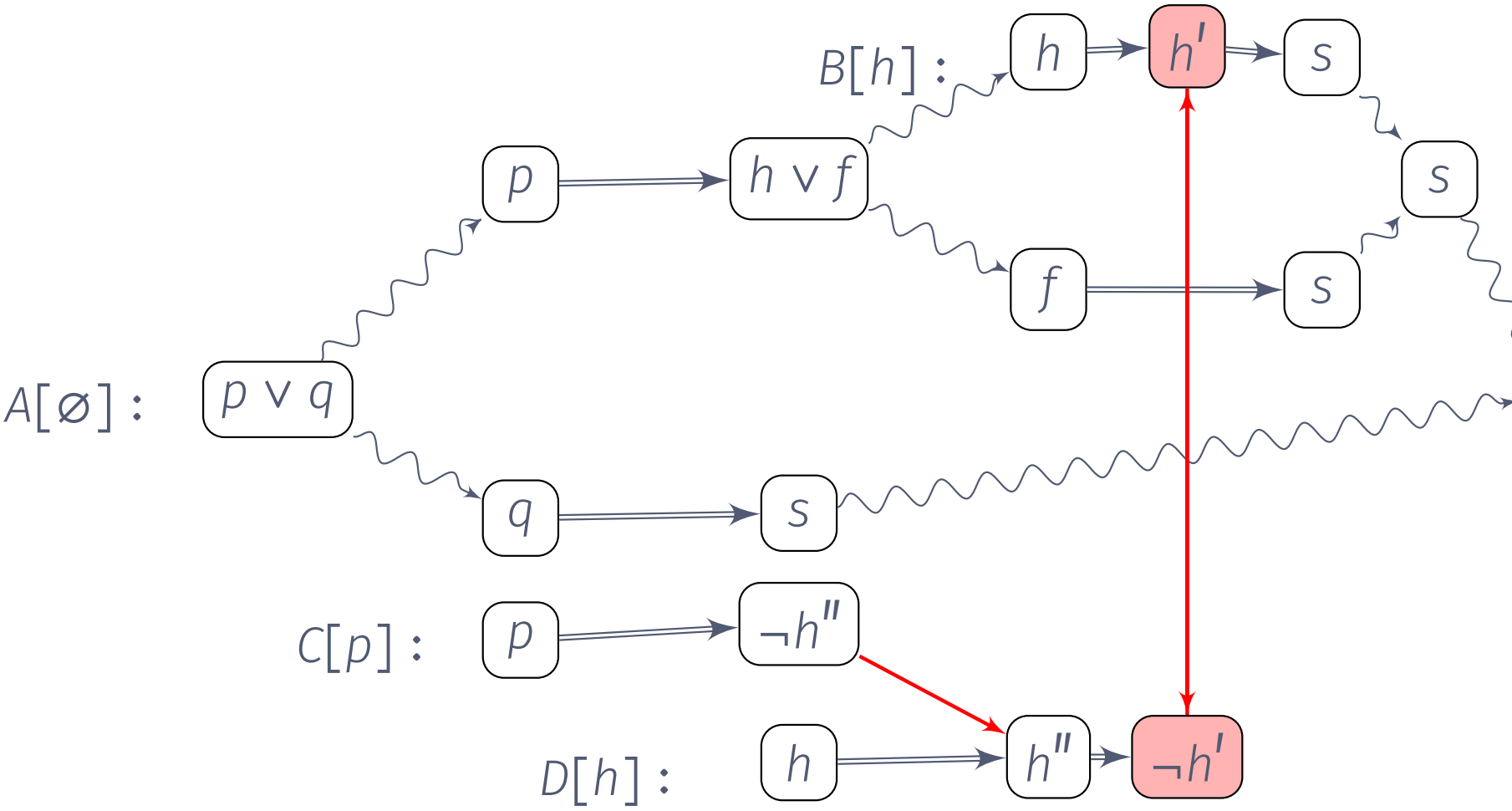

Another hard problem

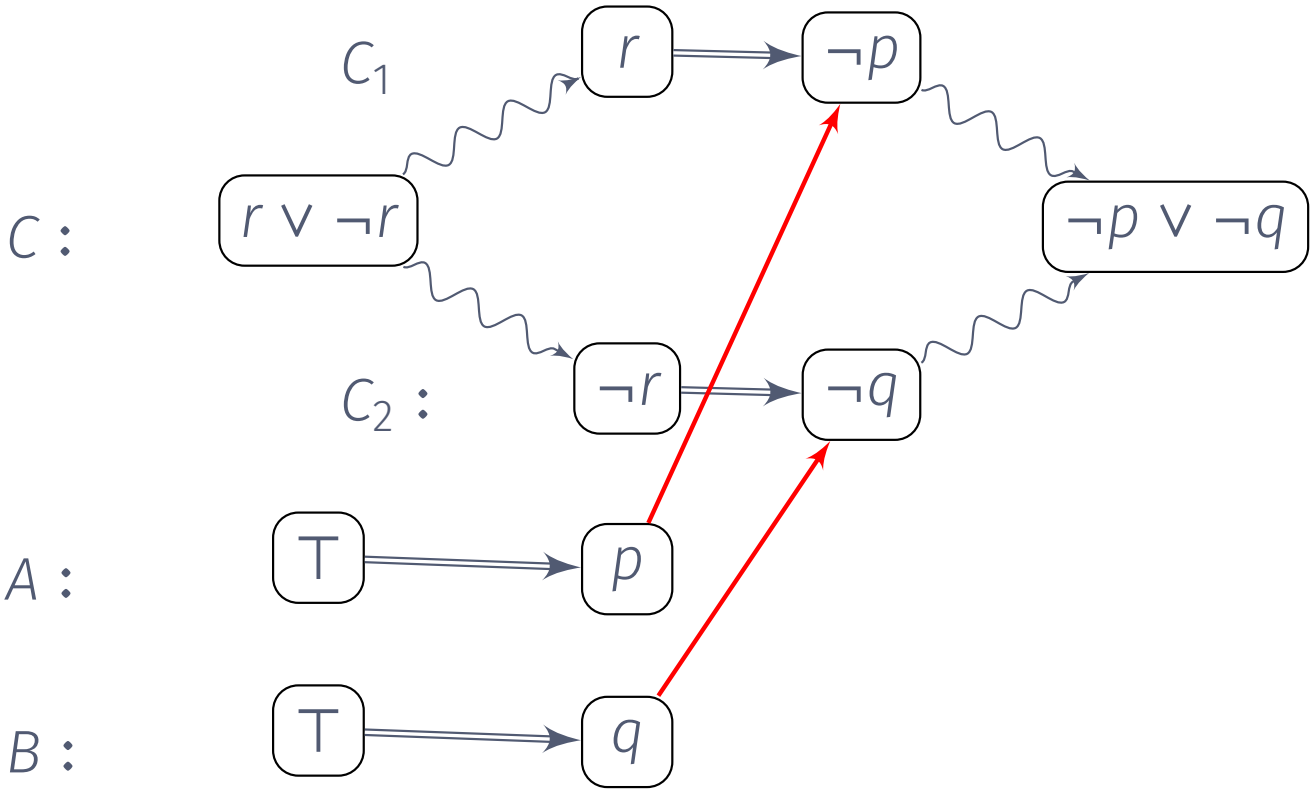

Weak Contraposition

Another hard problem (cont.): Contraposition of defeasible conditionals

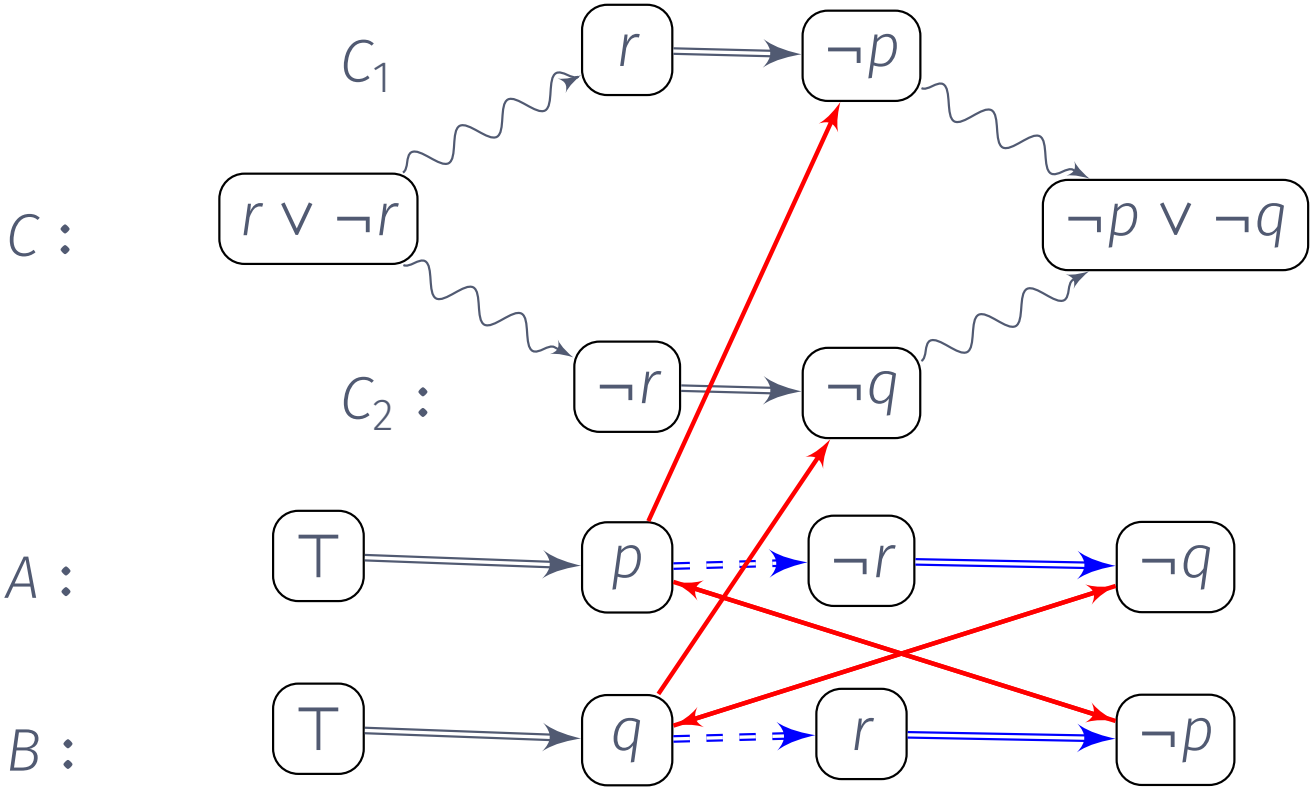

For reasoning with contrapositions of defeasible conditional one needs reasoning by cases!

Suppose we have $\mathcal{D} = \{s' \Rightarrow s;\ t' \Rightarrow t;\ s, t \Rightarrow p\}$ and $\mathcal{F} = \{\neg p\}$.

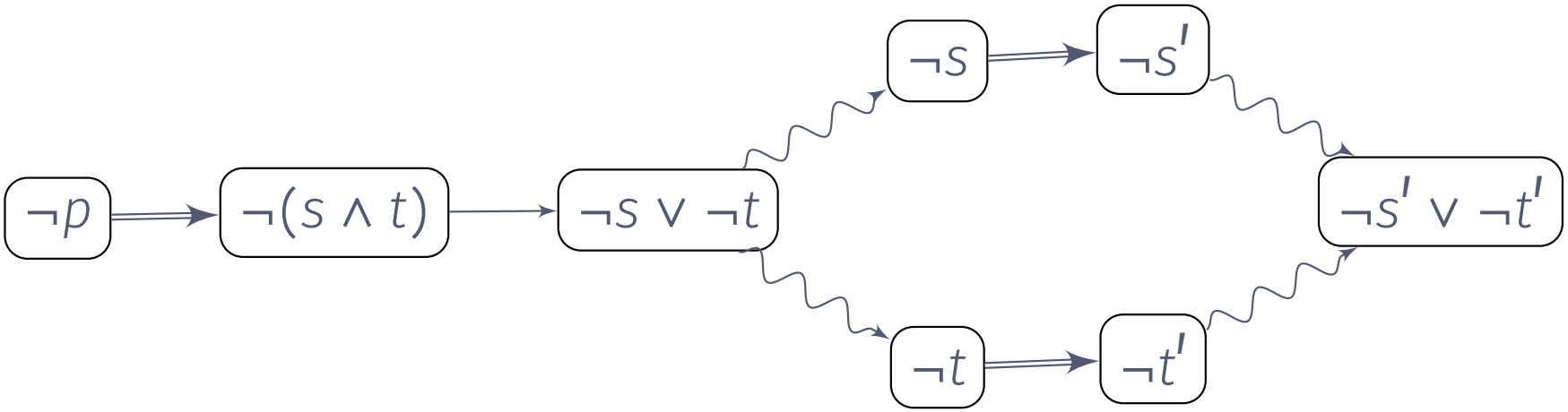

More Subtle Approach

Idea: Distinguish different commitments levels for propositions: qualify propositions.

- We let $\circ\phi$ stand for "I wouldn't be surprised by ϕ" / "ϕ would be consistent with my belief state" / etc.
- E.g., in terms of likelihood thresholds:

Status:	$\neg p$	$\neg \circ p$	$\circ \neg p$	$\circ p$	$\neg \circ \neg p$	p
Likelihood of p:	< 20	< 40	< 60	≥ 40	≥ 60	≥ 80

More Subtle Approach

Weak Modus Tollens: if $\phi \Rightarrow \psi \in \mathcal{D}$ then we have the argument $\langle \circ\neg\psi \Rightarrow \circ\neg\phi \rangle$.

(More general: if $\phi_1, \ldots, \phi_n \Rightarrow \psi \in \mathcal{D}$ then we have the argument $\langle \circ\neg\phi \Rightarrow \circ\neg \bigwedge_{i=1}^{n} \phi_i \rangle$)

Rationale: Suppose

- I consider $\phi \Rightarrow \psi$ to be applicable to the current situation (e.g., I don't commit to an undercut of it) and
- I consider $\neg\psi$ to be consistent with my belief state / I wouldn't be surprised by $\neg\psi$,
- then I should consider $\neg\phi$ to be consistent with my belief state / I shouldn't be surprised by $\neg\phi$.

(What about: $\neg \circ \psi \Rightarrow \neg \circ \phi$?)

More Subtle Approach

Weak Modus Ponens if $\phi \Rightarrow \psi \in \mathcal{D}$ then we have the argument $\langle \circ\phi \Rightarrow \circ\psi \rangle$.

(More general: if $\phi_1, \ldots, \phi_n \Rightarrow \psi \in \mathcal{D}$ then we have the argument $\langle \circ \bigwedge_{i=1}^{n} \phi_i \Rightarrow \circ\psi \rangle$)

Rationale: Suppose

- I consider $\phi \Rightarrow \psi$ to be applicable to the current situation (e.g., I don't commit to an undercut of it) and
- I consider ϕ to be consistent with my belief state,
- then I should consider ψ to be consistent with my belief state.

In our example ...

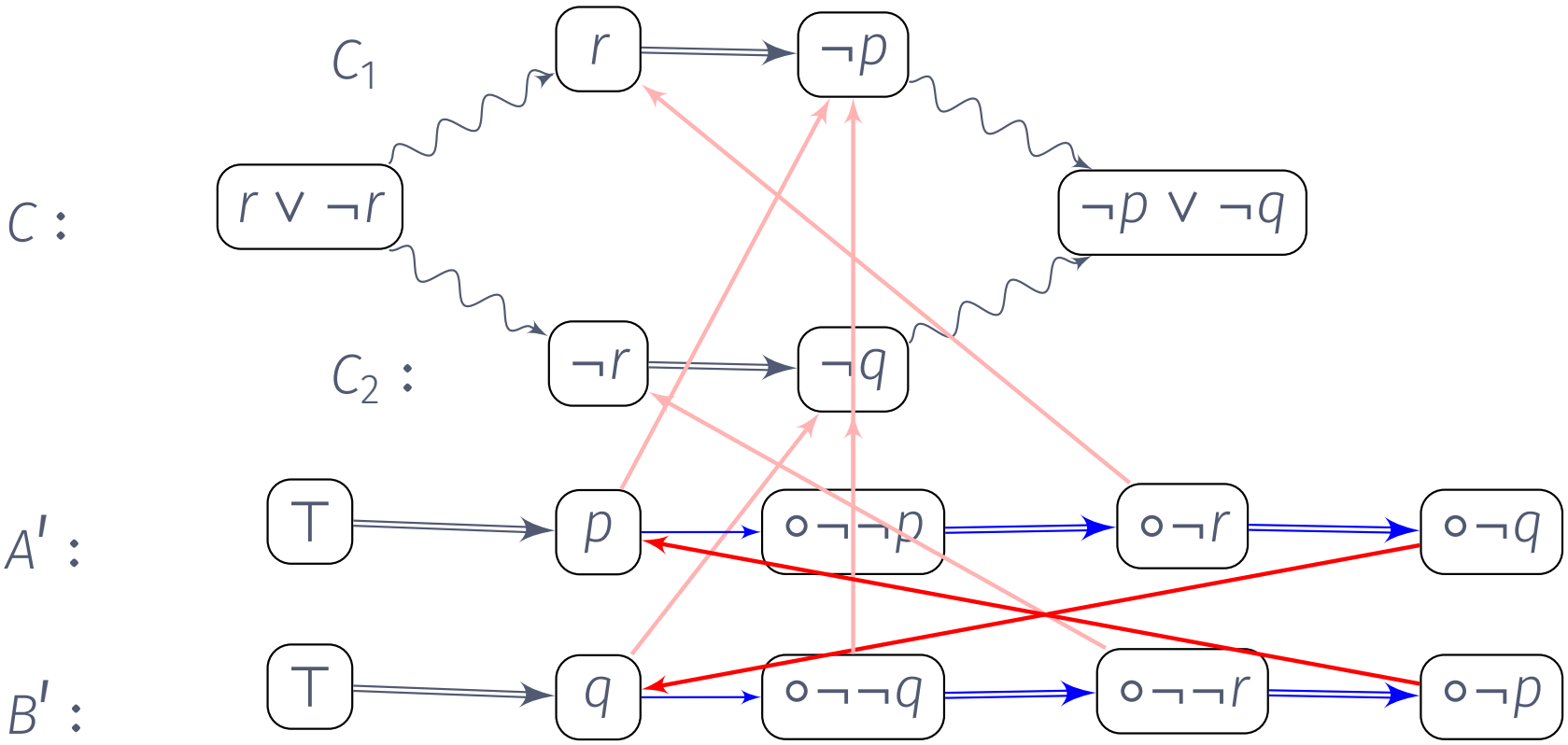

Back to the problem with closure

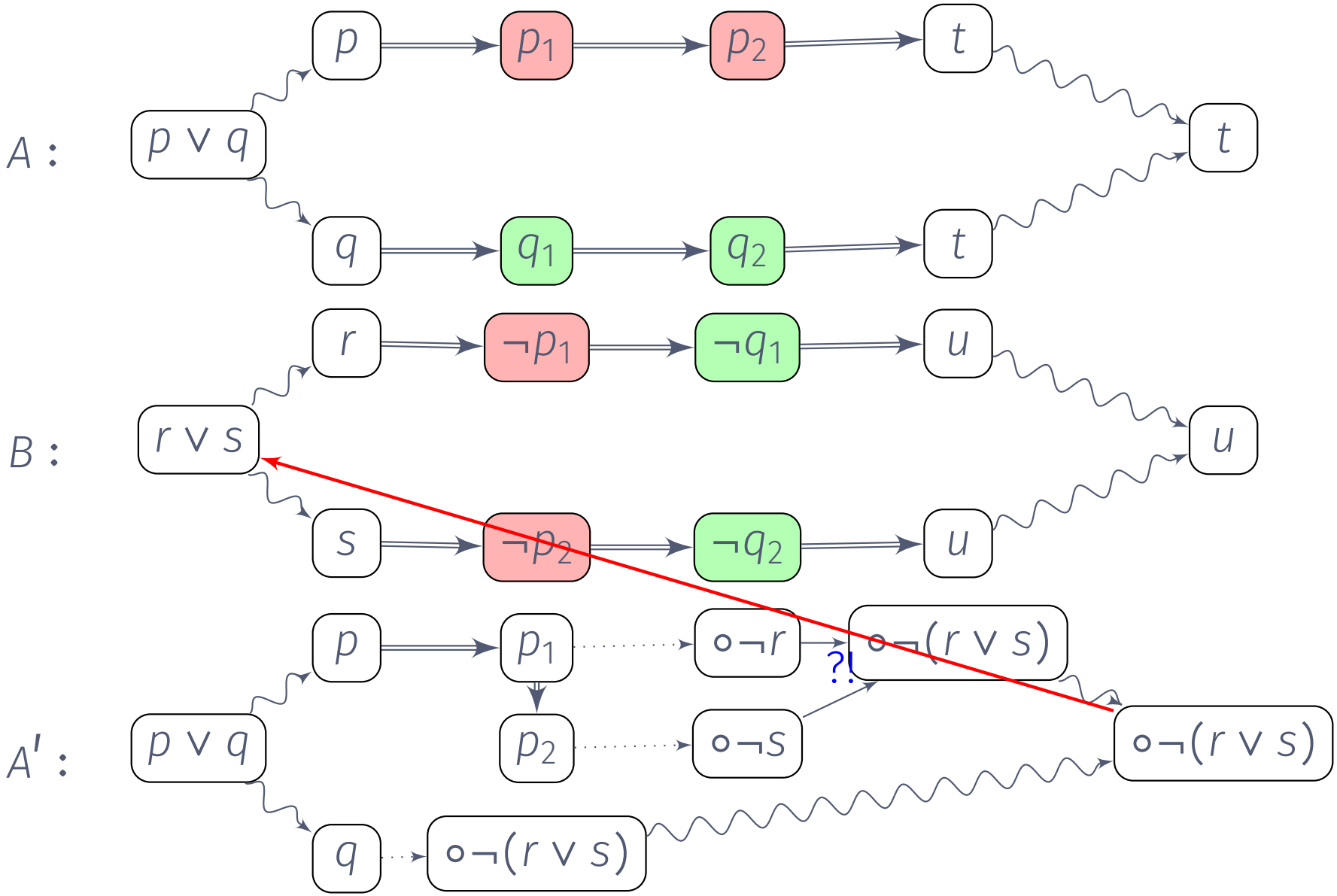

Greedy Reasoning

Given $\mathcal{D} = \{\top \Rightarrow p;\ \ p \Rightarrow q;\ \ q \Rightarrow r\}$ and $\mathcal{F} = \{\neg r\}$, we can't derive p and we can't derive q.

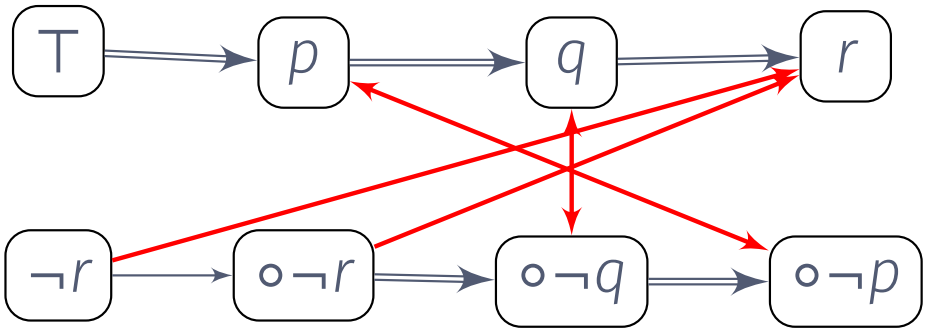

Summing up

This Talk

- rule-based approach to defeasible reasoning by cases
- based on the ASPIC framework
- fine-grained control over defeater conditions
- a taste of the many types of problems we encountered
- superior to methods based on manipulating the knowledge base (?)

Thank you